SECOND EUROPEAN CONFERENCE ON EARTHQUAKE ENGINEERING AND SEISMOLOGY, ISTANBUL AUG. 25-29, 2014

NONLINEAR MODELLING OF RC ELEMENTS BUILT WITH PLAIN REINFORCING BARS

José MELO[1], Humberto VARUM[2] and Tiziana ROSSETTO[3]

ABSTRACT

The numerical analysis of reinforced concrete structural elements is usually conducted under the assumption of perfect bond conditions, which may lead to predicted lateral deformation significantly smaller than the real element deformation or to predict lateral stiffness larger than the existing element stiffness. Bond-slip effects should therefore be included in the numerical models of structural analysis in order to represent more accurately the elements response. Due to the differences in the interaction mechanisms between concrete and steel in elements with deformed bars (currently used in the RC construction) and elements with plain bars, the models available for simulating the cyclic behaviour of RC structural elements with deformed bars are, in general, not adequate for elements with plain bars.

The paper describes the numerical modelling of the cyclic response of two reinforced concrete columns. One column was built with deformed reinforcing bars and the other with plain reinforcing bars. The columns have similar detailing and are representative of structures built up to 1970s. The numerical models were developed using the OpenSees and the SeismoStruct platforms and calibrated with the available experimental tests results. Within each platform, different nonlinear elements were used in the model of the columns. Bond-slip effects were included in the OpenSees models resorting to a simple modelling strategy. The models and the parameters adopted are presented and discussed. Comparisons are established between the most relevant experimental results and the corresponding results provided by the numerical models. It is also present a new tri-linear steel material in order to take into account the slippage of plain reinforcing bars. The parameters of the steel model were obtained empirically. Comparisons with the experimental results are established.

INTRODUCTION

A significant number of existing reinforced concrete (RC) building structures were constructed before the 70's, with plain reinforcing bars, prior to the enforcement of the modern seismic-oriented design philosophies. As a consequence of poor reinforcement detailing and of the absence of capacity design principles, a significant lack of ductility, at both the local and global levels, is expected for these structures, resulting in inadequate structural performance even under moderate seismic excitations.

Cyclic load reversals (like the ones induced by earthquakes) result in accelerated bond degradation, leading to significant bar slippage. Bond-slip mechanism is reported (Ioannou et al. 2012 and Rossetto et al. 2009) to be one of the most common causes of damage and collapse of existing RC structures subjected to earthquake loading. RC structures with plain reinforcing bars, built prior to the

[1] PhD Student, Civil Eng. Department, University of Aveiro, Aveiro; EPICentre, josemelo@ua.pt
[2] Associate Professor with Habilitation, Civil Eng. Department, University of Aveiro, Aveiro, hvarum@ua.pt
[3] Professor, EPICentre, Department of Civil, Environmental & Geomatic Eng., University College London, London, t.rossetto@ucl.ac.uk

enforcement of the modern seismic-oriented design philosophies, are particularly sensitive to bond degradation.

In the analysis of RC structures, perfect bond is usually assumed, i.e. considering compatibility between concrete and reinforcement strains at each structural member point. However, this assumption is only correct for early loading stages and low strain levels. For large loads, cracking and bond failure will occurs and bar slippage takes place in the structural elements Monti and Spacone (2000), Chen and Baker (2003). Considering the assumption of perfect bond conditions may lead to predicted lateral deformation significantly smaller than the real element deformation or to predicted lateral stiffness larger than the existing element stiffness as present in Sezen and Setzler (2008). Bond-slip effects should therefore be included in the numerical models of structural analysis in order to represent more accurately the elements response as stated by Kwak HG (1997), Youssef and Ghobarah (1999) and Melo et al. (2011).

This paper describes the numerical modelling of the cyclic response of two analogous RC columns, one with deformed bars and the other with plain bars and structural detailing similar to that typically found in RC structures designed and built before the 1970s (that is, not adequate for seismic demands). The numerical models were developed using the OpenSees and the SeismoStruct platforms and calibrated with the available experimental tests results. Different nonlinear fibre elements were used for modelling the columns. The bond-slip effects were included in the OpenSees model by incorporating a zero length element. The material and bond-slip models as well as the element models are presented and discussed. Comparisons between the numerical and experimental results are established in order to draw conclusions about the capacity of the models to simulate cyclic response of the columns. A new tri-linear steel material is also proposed to take into account the slippage of plain reinforcing bars. The experimental results of eight tests carried out on columns (Melo et al. 2014) were used to calibrate the monotonic tri-linear steel model. The results obtained from the numerical models with and without considering the tri-linear steel model are compared with experimental results.

COLUMN SPECIMENS – DETAILS AND MATERIAL PROPERTIES

The geometry, dimensions and reinforcing details of the specimens are shown in Fig.1. Each specimen represents a half-storey cantilever column (at foundation level) in a building with three or four storeys. The length of the column specimens is 2.17m, and the lateral load is applied at 1.7m from the columns base. The specimens have square cross-sections with dimensions 0.30x0.30m^2. The foundation consists of a stiff RC block with a section of 0.30x0.60m^2 and 1.5m length. The longitudinal reinforcement of the columns in both lateral faces is composed of three bars of 12mm diameter. The shear reinforcement in the columns was composed of 8mm diameter stirrups spaced at 0.20m centres. The specimen with plain reinforcing bars is called CPA-3 and the specimen with deformed bars is called CD (Melo et al. 2014a and Melo et al. 2014b).

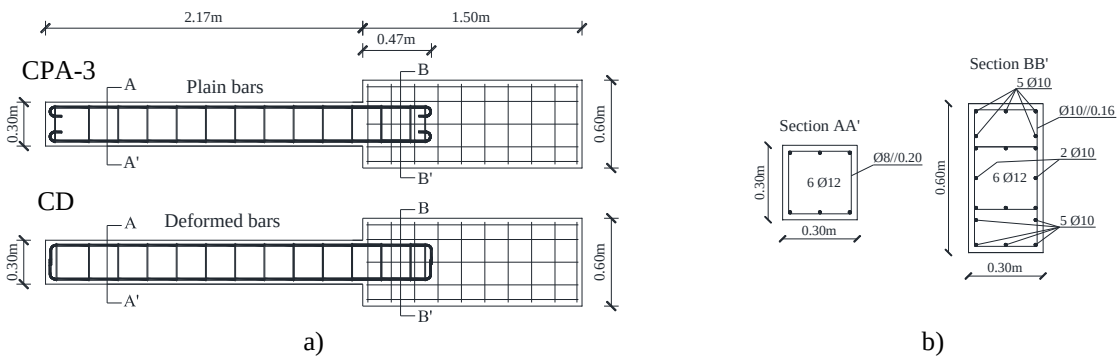

Figure 1. Column specimens: a) dimensions and reinforcement detailing; b) cross-section

Table.1 summarizes the mean values of the material properties used in the construction of the specimens, where f_{cm} is the concrete compressive strength of cylinder samples with dimensions Ø150mmx300mm, f_{ctm} is the axial tensile strength of concrete, f_{ym} is the yield strength of

reinforcement, f_{um} is the ultimate tensile strength of reinforcement and E_{ym} is the Young's modulus of the reinforcing steel.

Table 1. Mean values of the materials mechanical properties

Specimen	Concrete			Steel				
				Ø 8 mm		Ø 12 mm		
	(MPa)				(GPa)	(MPa)		(GPa)
	f_{cm}	f_{tcm}	f_{yk}	f_{uk}	E_{ym}	f_{yk}	f_{uk}	E_{ym}
CPA-3	17.4	2.1	410	495	198	405	470	199
CD	17.1	2.0	470	605	198	465	585	199

Fig.2 illustrates the idealised support and loading conditions and shows the imposed lateral displacement history at the top of the columns. The axial load (N) was always centred with the column section at the base (plastic hinge zone), avoiding the occurrence of second order effects. The axial force applied was constant along the cyclic test for both specimens. An axial force ratio of 0.18% was applied, i.e. 305kN. Both tests were carried out under displacement-control conditions. A hydraulic servo-actuator imposed the lateral displacements (d_c) at 1.7m from the column base. Three cycles with load reversals were imposed for each of the following peak drift values (± %): 0.1, 0.2, 0.3, 0.5, and then increments of 0.5 up to 5.0.

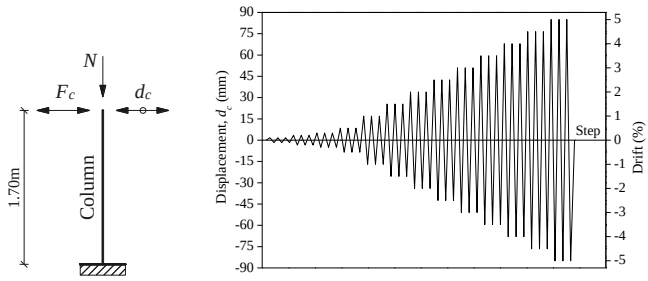

Figure 2. Support and loading conditions idealized and imposed lateral displacement

NUMERICAL MODELS ADOPTED

OpenSees numerical models

The Open System for Earthquake Engineering (OpenSees) is an open source software framework for finite analysis and it was developed to simulate the response of structural and geotechnical systems subjected to earthquakes.

For each column two nonlinear models were developed using OpenSees, namely: i) model with *nonlinearBeamColumn element* (distributed plasticity) and ii) model with *BeamWithHinges element* (concentrated plasticity) and *zero-length section element*. The *zero-length section element* was incorporated to simulate the effects of the bar slippage associated with the strain penetration effects and bond-slip mechanism.

The elements are represented by unidirectional fibres which are assigned by the proper material stress-strain relationships describing the materials monotonic response and hysteretic rules. The foundation of the columns was not considered in the numerical models.

The *nonlinearBeamColumn element* is based on the non-iterative (or iterative) force formulation and considers the spread of plasticity along the element. The integration along the element is based on Gauss-Lobatto quadrature rule. The element is prismatic and it is represented by fibre sections at each integration point (see Fig.3). In this study, five integration points were adopted for the column element.

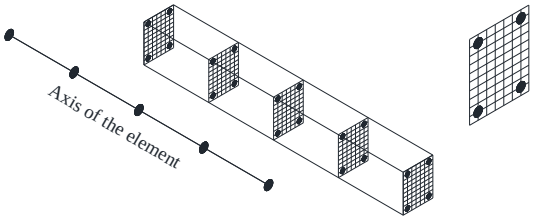

Figure 3. *NonlinearBeamColumn element* with five integration points

The *BeamWithHinges element* is based on the non-iterative (or iterative) flexibility formulation (Mazzoni et al. 2007). The element considers plasticity concentrated over specified hinge lengths at the elements ends (plastic hinges). This element is divided into three parts: two hinges at the ends and a linear-elastic region in the middle. The Gauss integration points are located in the hinge regions. The length adopted for the plastic hinges in the numerical model correspond to the length observed in the experimental tests, i.e. 0.30m for column CPA-3 (specimen with plain reinforcing bars) and 0.35m for the column CD (with deformed bars).

The *zero-length section element* has a unit-length and as a consequence the element deformations and section deformations are the same. The unit length assumption also implies that the material model for the steel fibres represents the bar slip instead of strain of the bar stress. Therefore, a specific material model, defined by a bar stress-slip relationship is used. If placed at the end of a beam/column element, this element can be used to incorporate the fixed-end rotation caused by strain penetration and bond-slip to the beam/column element (Mazzoni et al. 2007). A duplicate node (two nodes with the same coordinates) is required to define the *zero-length section element*. Because the shear resistance is not included in the element, the relative translational degree-of-freedom of these nodes must be constrained to each other to prevent sliding of the beam/column element under lateral loads.

For the models developed, the *zero-length section element* was placed between the foundation and the *BeamWithHinges element* (identified as linear element in Fig.4). Therefore, the *zero-length section element* is located where is expected the maximum moment and slippage in the column.

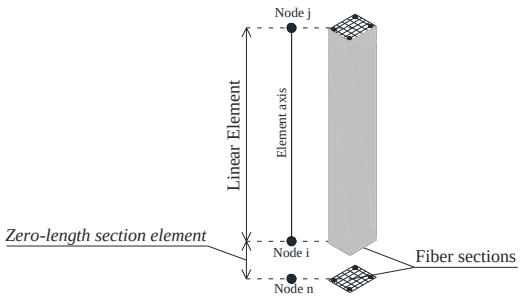

Figure 4. *Zero-length section element* and linear element (*BeamWithHinges element*)

The material models *Concrete02* and *Steel02* were adopted for the concrete and reinforcement respectively. The *Concrete02* model was also adopted in the *zero-length section element*. The concrete model considers the concrete tensile strength, and takes into account the confinement effect due to the longitudinal bars and the stirrups based on the law adapted by Mazzoni et al. 2007. The values adopted for the *Concrete02* model parameters were the same in the both models of each column. An elastic material with the same elastic modulus of the concrete was used for the elastic part of the *BeamWithHinges element*. The *Steel02* model is based on the Giuffré-Pinto formulation, implemented later by Menegotto and Pinto (1973). The values adopted in the *Steel02* model were the same in the both models of each column. The steel mechanical properties are those previously presented in Table.1 and the values of the parameters *bst* (ratio between post-yield tangent and initial elastic tangent) and *R0* (parameter that controls the transition from elastic to plastic branches) are presented in Table.2.

The material model *Bond_SP01* available in OpenSees is a bar stress-slip model and it was adopted for the steel fibres in the *zero-length section element*. This generic model was proposed by

Zhao and Sritharan (2007) based on results of pull-out tests of deformed reinforcing bars anchored in concrete footings with sufficient embedment length, loaded at the free end zone (Zhao and Sritharan 2007). The values adopted for the model parameters are indicated in Table.1, where α is a tuning parameter used for adjusting the local bond stress-slip relationship, b is a stiffness reduction, and R is a pinching factor for the cyclic relationship between bar stress and slip. The *Bond_SP01* model was calibrated for elements with deformed bars, but it might be used in elements with plain reinforcing bars changing the parameter α from 0.4 to 0.5. For specimen CD, parameter α was equal to 0.4, as proposed by Zhao and Sritharan (2007). The slip values corresponding to the yield strength (S_y) and ultimate strength (S_u) were computed using the equations proposed by Zhao and Sritharan (2007).

Table 2. Mean values of the materials mechanical properties

Material model	Parameter	CPA-3	CD
Steel02	*bst*	0.037	0.044
	R0	12.0	15.5
Bond_SP01	α	0.50	0.40
	b	0.30	0.40
	s_y	0.46 (mm)	0.44 (mm)
	s_u	$40s_y$ (mm)	$40s_y$ (mm)
	R	0.30	0.80

SeismoStruct numerical model

The SeismoStruct is a finite element package capable of predicting the large displacements behaviour of space frames under static or dynamic loading, taking into account geometric nonlinearities and material inelasticity (Seismosoft 2014).

For each column a nonlinear model was developed. The model was built with inelastic plastic hinge frame elements (*infrmFBPH element*) with nonlinearity concentrated within a fixed length of the element (plastic hinge). This element has a force-based formulation and the cross-sections are idealized through fibre modelling. The effects of bar slippage were not take into account in the SeismoStruct model.

The material models *con_ma* and *stl_mp* available in SeismoStruct were adopted for the concrete and reinforcement respectively. The *con_ma* concrete model is an uniaxial nonlinear constant confinement model that follows the constitutive relationship proposed by Mander et al. (1988). The material properties adopted in the OpenSees concrete model were also adopted for the *con_ma* concrete model. The *stl_mp* steel model is based on the stress-strain relationship proposed by Menegotto and Pinto (1973), coupled with the isotropic hardening rules proposed by Filippou et al. (1983). The steel mechanical properties adopted are those previously presented in Table.1. The default values of the steel model parameters were token, except for R_0 which was equal to 19.5 instead of 20.0 (default value). R_0 parameter controls the shape of the transition curve between initial and post-yield stiffness.

NUMERICAL RESULTS – COMPARISON WITH EXPERIMENTAL RESULTS

The results obtained from the numerical analyses of the two RC columns are presented and discussed in this section. Comparisons between the numerical and experimental results are established namely in terms of force-drift diagrams and energy dissipation. The dissipated energy is calculated as the cumulative sum of the energy dissipation associated with each cycle, corresponding to the area inside the loops in the force-drift diagrams. The experimental results of column CD are presented only up to 3.5% drift and not 5% (maximum imposed drift) due to problems with the data acquisition system.

Fig.5 compares the experimental and the numerical force-drift relationships for both columns. The models developed in OpenSees are identified as OS and the ones developed in SeismoStruct are identified as SS. In general, for all numerical models the initial stiffness and the maximum strength are similar to the corresponding experimental results, but the softening is not proper achieved in the OS model with *nonlinearBeamColumn element* and for drift demands larger than 3.5%.

The models with plasticity concentrated developed in SeismoStruct represents better the cyclic response of both columns when compared with the model with distributed plasticity developed in OpenSees. Including the effects of bar slippage in the OpenSees models by using the z*ero-length section element* improve the numerical response namely in terms unloading and reloading stiffness. The best fit to the experimental results was obtained by the OpenSees model with concentrated plasticity (*BeamWithHinges element*) and considering bar slippage (*zero-length section element*). However, the worst simulation was provided by the OpenSees model with distributed plasticity. The effects of including the bar slippage are more evident in column CPA-3 (with plain bars) rather than column CD (with deformed bars). Therefore, considering the slippage in RC elements built with plain reinforcing bars might lead to better represent the real response.

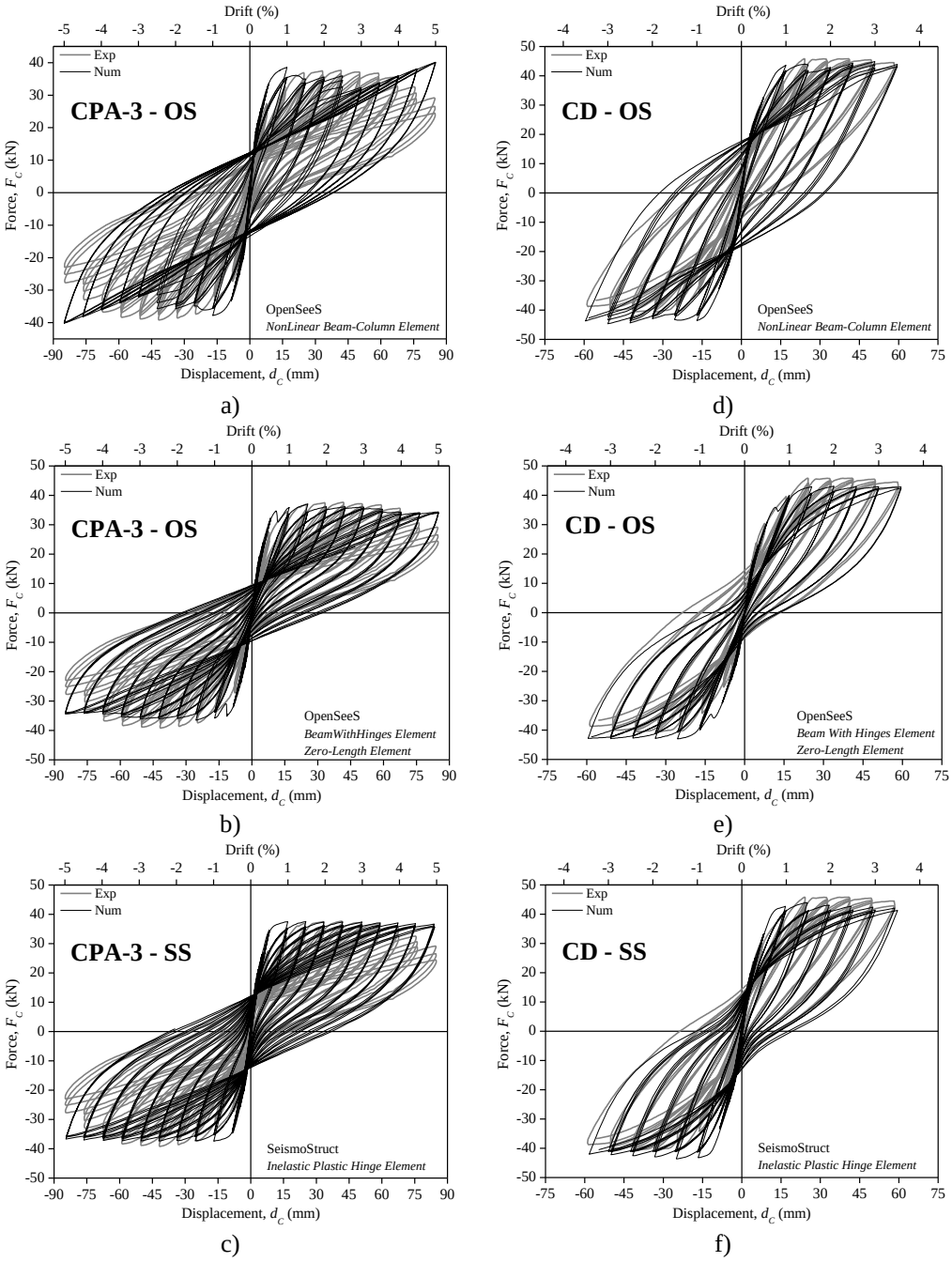

Figure 5. Experimental and numerical force-drift diagrams obtained for column CPA-3 and CD

The evolutions of the dissipated energy obtained based on the experimental and numerical results are show in Fig.6. Table.3 presents the ratios between the numerical and experimental dissipated energy up to different drift levels. The dissipated energy obtained in all numerical models are larger than the corresponding experimental dissipate energy mainly for drift demands larger than 1.0%.

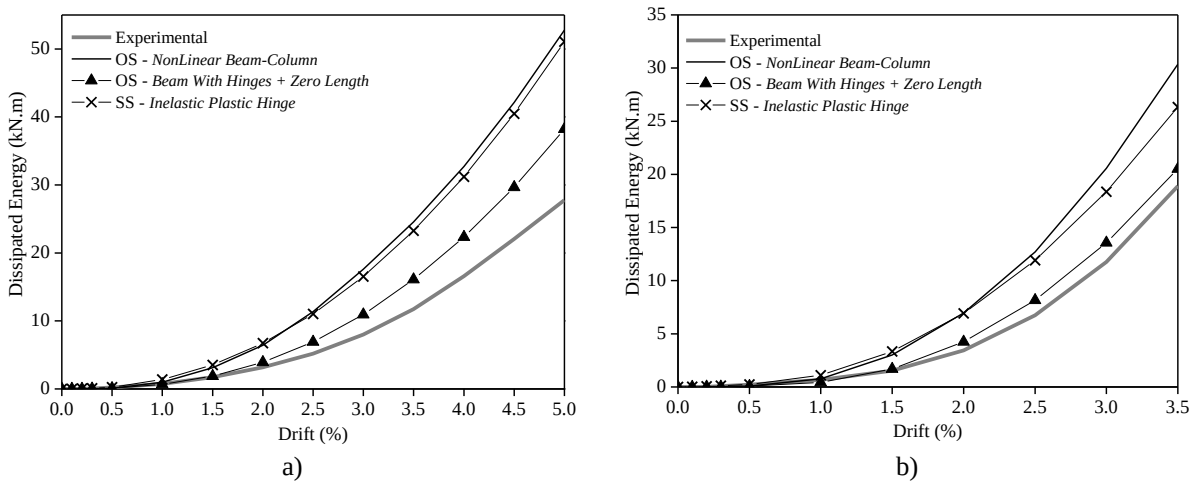

Figure 6. Evolution of the dissipated energy: a) column CPA-3; and b) column CD

The model that led to the best agreement with the experimental results was the OpenSees model with concentrated plasticity *BeamWithHinges elements* and *zero-length section element* (considering the effects of bar slippage). For this model, at the maximum drift (5.0%), the corresponding dissipated energy is 38% higher than the experimental energy. The SeismoStruct model with distributed plasticity elements conducted to the worst simulation for both columns. In this case, the numerical dissipated energy at the maximum drift is about twice the experimental energy for column CPA-3 and 1.6 times for column CD. Also in accordance with what was previously concluded for the force-drift diagrams, considering the plasticity concentrated instead of distributed along the column length led to a better reproduction of the dissipated energy evolution. By considering the effects of bar slippage, the difference in terms of dissipated energy at the maximum drift between the numerical and experimental results is reduced in about 30% for columns CPA-3.

Table 3. Experimental and numerical dissipated energy ratio for different drift levels

Column	Element model	Dissipated energy ratio at drift			
		1.0%	2.0%	3.5%	5.0%
CPA-3	OS – NonLinear Beam-Column	1.30	2.02	2.09	1.90
	OS – Beam With Hinges + Zero Length	0.91	1.24	1.37	1.38
	SS – Inelastic Plastic Hinge	1.84	2.12	1.98	1.84
CD	OS – NonLinear Beam-Column	1.13	2.02	1.61	
	OS – Beam With Hinges + Zero Length	0.64	1.23	1.08	
	SS – Inelastic Plastic Hinge	1.64	2.01	1.39	

NEW TRI-LINEAR REINFORCING STEEL MODEL

In the numerical models the bond-slip effects can be take into by several ways. One is considering a zero length section as adopted in the previous section. Another method is add springs on the reinforcing steel bars along its length or in specific sections in order to simulate the slippage concentrated at same points. However, in reality the bar slippage occurs along the reinforcing bar and not concentrated in some points. A simple way to consider the bond-slip effects is changing the numerical steel model by reducing the Young steel modulus (Varum 2003). Reducing the Young steel

modulus the RC element becomes more flexible and its maximum strength is achieved for larger drift demands than considering the original Young steel modulus.

Figure.7 shows the forces that occurs in a generic section of a RC elements when loaded laterally. The forces on concrete and steel which occur in the section depends the stress-strain idealized for concrete and steel. Eurocode 2 (CEN 2010) presents a parabolic-rectangular stress-strain diagram for confined concrete that was adopted in this study (see Fig.8a). Eurocode 2 (CEN 2010) also presents a bilinear stress-strain diagram idealized for reinforcing steel. To consider the bar slippage, a new tri-linear steel stress-strain diagram is idealized for the reinforcing steel (see Fig.8b).

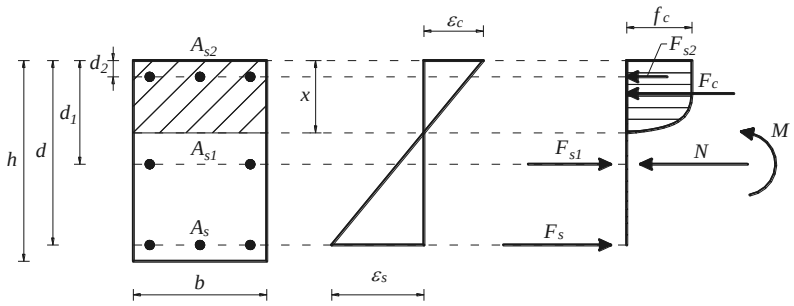

Figure 7. Idealized forces distribution in a section

The first branch of the tri-linear reinforcing steel model is characterized by the steel Young modulus ($E_{s,0}$) up to $\beta \cdot f_y$, where f_y is the yield stress and β is an empirical parameter. The slope of the second branch ($E_{s,1}$) is equal to the slope of the first branch affected by the empirical factor α_1. The slope of the third branch is given by the original hardening slope ($E_{s,u}$) multiplied by the empirical factor α_2.

Analytical expressions were developed to obtain the moment-curvature relationship for the generic section shows in Fig.7. The idealized stress-strain present in Fig.8 were taken to compute the section forces (F_c, F_s, F_{s1} and F_{s2}). In the analytical approach, it is assumed that the section remain plain when loaded.

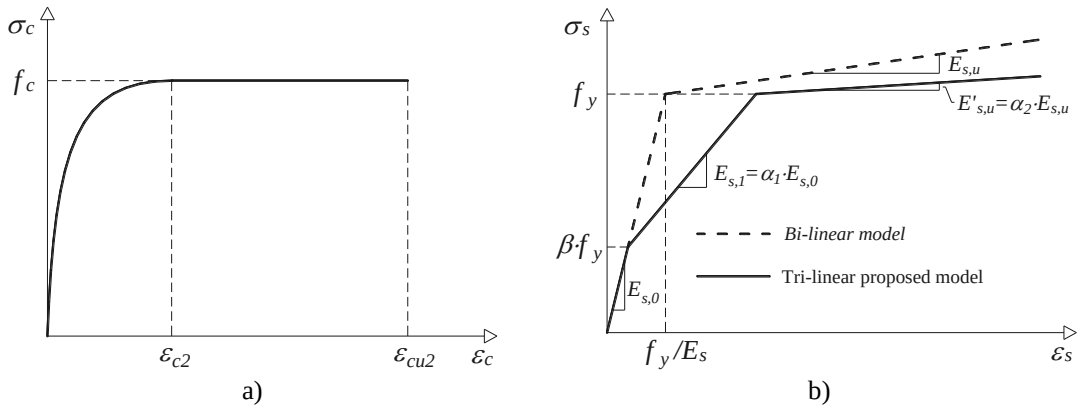

Figure 8. Idealized stress-strain diagrams: a) concrete; and b) reinforcing steel

Based on the experimental moment-curvature diagrams of eight cyclic tests carried out on columns with plain reinforcing bars (Melo et al. 2014b) the parameters β, α_1 and α_2 of the tri-linear steel model were empirically obtained. These parameters were found matching the analytical moment-curvature relationship with the corresponding experimental moment-curvature relationship. The best fits of the moment-curvature diagrams were obtained when β is given by Eq.(1), α_1=0.085 and α_2=0.30, where h is the cross-section depth. For specimen with deformed reinforcing bars (CD) the parameters obtained are β=0.45, α_1=0.25 and α_2=0.50.

$$\beta = -1.39 \cdot h + 0.85 \tag{1}$$

Two monotonic numerical models were developed for columns CPA-3 and CD in OpenSees. Model 1 do not takes into account the slippage effects and model 2 considers the slippage by using the tri-linear steel model suggested. The models without considering slippage are the same of the models with *nonlinearBeamColumn element* presented in the previous section but the lateral load is monotonic. For the models which consider the slippage mechanism was used the *nonlinearBeamColumn element* and the materials *Concrete02* for concrete and *Hysteretic* for the reinforcement. The material *Hysteretic* follows the stress-strain diagram shows in Fig.8b and were adopted the values previously suggested for the parameters β, α_1 and α_2.

The monotonic numerical results of model 1 and model 2 are compared with the experimental results in Fig.9. In Fig.9 the curve called "Num." is given by model 1 and the curve called "Num. with slip" is given by model 2. When the slippage in consider (model 2) the monotonic numerical response fits better with the experimental results. The benefits of using the new tri-linear steel model are more evident in the column with plain bars (CPA-3).

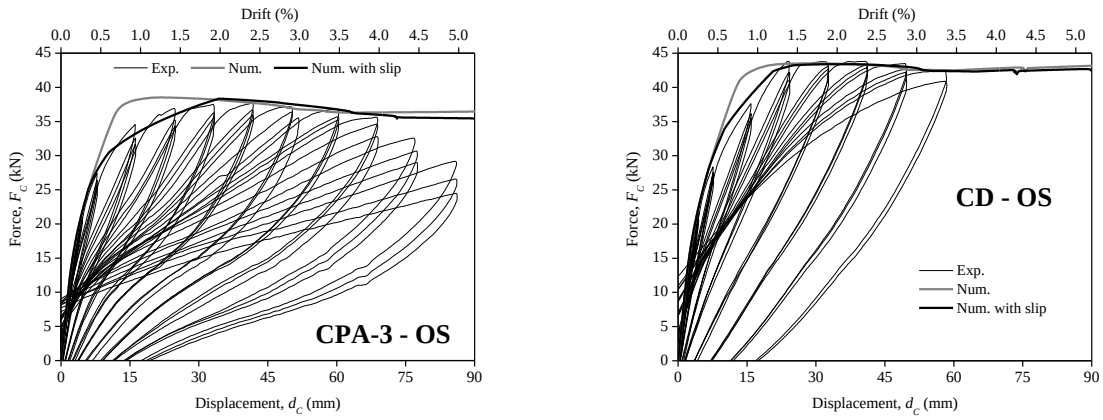

a) b)

Figure 9. Numerical and experimental force-displacement relationships: a) CPA-3; and b) CD

CONCLUSIONS

In paper is presented and discussed the numerical models of two analogous RC columns tested cyclically, one built with plain bars and other with deformed bars. The numerical models were developed with OpenSees and SeismoStruct platforms. For each platform, nonlinear elements with distributed plasticity or concentrated plasticity were used to represent the columns. The influence of considering the effects of bar slippage in the numerical modelling was also investigated. For each column specimen, comparisons were established between the numerical and experimental results, in terms of force-drift diagrams and evolution of dissipated energy. In the paper is also present a new tri-linear steel material that takes into account the slippage of plain reinforcing bars.

All the numerical models provided a satisfactory simulation of the experimental force-drift diagrams. However, the models were not able to proper capture the strength degradation, the reloading stiffness and the pinching effect, mainly for the column with plain bars. For both columns, the best agreement between the numerical and experimental results (envelop strength, stiffness and energy dissipation) was obtained considering the element with plasticity concentrated and incorporating the effects of bar slippage in the zero-length section element.

When the tri-linear steel model here proposed is used as a steel reinforcement material in the fibre sections led to a better numerical approach with the experimental response than considering the common steel material (*Steel02*). This conclusion is valid for both columns here studied, but it was more obvious for the columns with plain reinforcing bars where the slippage levels are large.

The results here presented confirm the importance of include the bond-slip effects in numerical modelling of RC structural elements with plain reinforcing bars in order to represent better their cyclic response.

ACKNOWLEDGEMENTS

This paper reports research developed under financial support provided by "FCT - Fundação para a Ciência e Tecnologia", Portugal, namely through the PhD grant of the first author, with reference SFRH/BD/62110/2009.

REFERENCES

CEN. NP EN 1992-1-1 (2010) "Eurocode 2: Design of concrete structures. Part 1-1: General rules and rules for buildings," European Committee for Standardization. Brussels. Belgium

Chen G and Baker G (2003) "Influence of Bond Slip on Crack Spacing in Numerical Modeling of Reinforced Concrete," *Journal of Structural Engineering*, 129(11):1514-1521

Filippou FC, Popov EP, Bertero VV (1983) "Effects of bond deterioration on hysteretic behaviour of reinforced concrete joints," Report EERC 83-19, Earthquake Engineering Research Center, University of California, Berkeley

Ioannou I, Borg R, Novelli V, Melo J, Alexander D, Kongar I, Verrucci E, Cachill B, Rossetto T (2012) "The 29th May 2012 Emilia Romagna Earthquake – EPICentre Field Observation Report," No. EPI-FO-290512, 2012, University College London, Department of Civil, Environmental and Geomatic Engineering

Kwak HG (1997) "Improved numerical approach for the bond-slip behavior under cyclic loads," *Structural Engineering and Mechanics*, 5(5):663-677

Mander JB, Priestley MJN, Park R (1988) "Theoretical stress-strain model for confined concrete," *Journal of Structural Engineering*, 114(8):1804-1826

Mazzoni S, McKenna F, Scott MH, Fenves GL (2007) "OpenSees Command Language Manual," Pacific Earthquake Engineering Research Center, University of California, Berkeley, U.S.A.

Melo J, Fernandes C, Varum H, Rodrigues H, Costa A, Arêde A (2011) "Numerical modelling of the cyclic behaviour of RC elements built with plain reinforcing bars," *Engineering Structures*, 33(2):273-286

Melo J, Varum H, Rossetto T (2014a) "Experimental response of RC elements built with plain reinforcing bars," *Proceedings of the Second European Conference on Earthquake Engineering and Seismology*, Istanbul, Turkey, 25-29 August

Melo J, Varum H, Rossetto T (2014b-submitted) "Experimental Cyclic behaviour of RC columns with plain bars – Eurocode 8 Improvement Propose," Engineering Structures (submitted)

Menegotto M and Pinto P (1973) "Method of analysis for cyclically loaded reinforced concrete plane frames including changes in geometry and non-elastic behaviour of elements under combined normal force and bending," In: IABSE Symposium: Resistance and Ultimate Deformability of Structures Acted on by Well Defined Repeated Loads, Final Report, Lisbon, Portugal

Monti G, Spacone E. (2000) "Reinforced Concrete Fiber Beam Element with Bond-Slip," *Journal of Structural Engineering*, 126(6):654-661

Rosseto T, Peiri N, Alarcon J, So E, Sargeant S, Sword-Daniels V, Libberton C, Verrucci E, Re D, Free M (2009) "The L'Aquila, Italy Earthquake of 6 April 2009 – A Preliminary Field Report by EEFIT," The Earthquake Engineering Field Investigation Team, University College London, Department of Civil, Environmental and Geomatic Engineering

Seismosoft; SeismoStruct, available on the internet site: http://www.seismosoft.com/en/SeismoStruct.aspx, 2014.

Sezen H and Setzler EJ (2008) "Reinforcement Slip in Reinforced Concrete Columns," *ACI Structural Journal*, 105(3):280-289

Varum H (2003) "Seismic assessment, strengthening and repair of existing buildings," PhD Thesis. University of Aveiro. Aveiro. Portugal

Youssef M and Ghobarah A (1999) "Strength Deterioration due to Bond Slip and Concrete Crushing in Modeling of Reinforced Concrete Members," *ACI Structural Journal*, 96(6):956-966

Zhao J and Sritharan S (2007) "Modelling of strain penetration effects in fibre-based analysis of reinforced concrete structures," *ACI Structural Journal*, 104(2):133-141