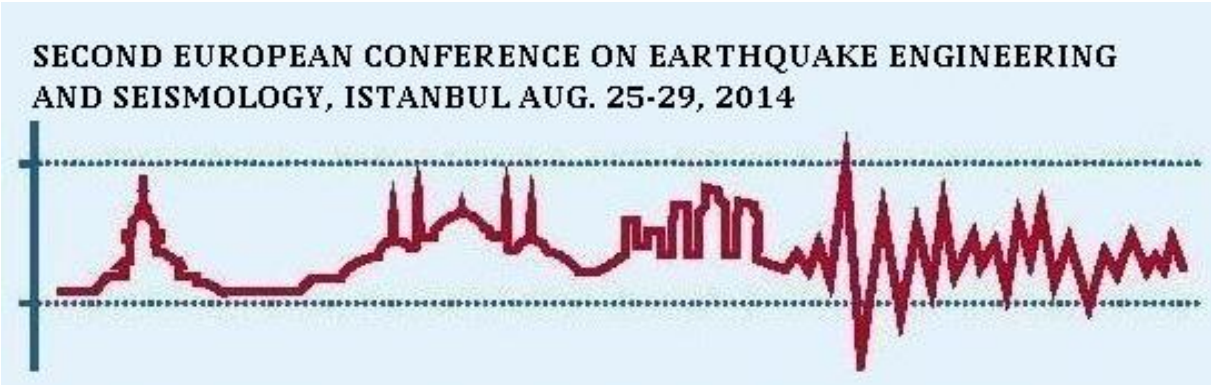

THE NEW GENERATION NATIONAL STANDARDS OF UKRAINE DBN V.1.1-12: 2013 "CONSTRUCTION IN SEISMIC REGIONS OF UKRAINE"

Iurii NEMCHYNOV, Alexander KHAVKIN, Nikolai MARYENKOV, Konstantin BABIK[1],
Vitali DOROFEEV, Konstantin EGUPOV, Igor SHEKHOVTSOV, Svetlana PETRASH[2],
Vladimir KUKUNAEV, Igor ZOLOTAREV[3],
Boris GUDKOV[4], Alexander KENDZERA[5],
Bella PUSTOVITENKO, Andrei PUSTOVITENKO and Valeri KULCHYTSKYI[6]

ABSTRACT

The report presents the provisions of the new edition of the National Norms of Ukraine DBN V.1.1-12:2013 "Construction in seismic regions of Ukraine" [1], which takes into account the recent achievements of the seismic stability theory for buildings and facilities designing in regions with seismic intensities from 6 up to 10 points according to DSTU B V.1.1-28 [2] with allowance for the requirements of the National Standard DSTU-N B V.1.2-16:2013 [3] and recommendations of the European Standard EN 1998-1: 2004 "Design of structures for earthquake resistance" [4].

INTRODUCTION

The general requirements to the safety of designed building shall be governed by Eurocode EN 1990:2002 "Basis of structural design". For practical reasons, in the territory of Ukraine the three levels of seismic stability ensuring have been approved. They correspond to the particular levels of structure damages and describe the following:

- the absence of damages and possibility of immediate occupance after the earthquake – *minor earthquake (ME) with the intensity increase of 39% within 50-year period and the frequency of return equaling once per 100 years;*
- the ensuring of life safety and possibility of repair and restoration work after the moderate earthquake – *design-basis earthquake (DBE) with the intensity increase of 10% or 5% within 50-year period and the frequency of return equaling once per 500 or 1000 year, respectively;*
- the ensuring of building structural stability, safety of human lives, and protection of valuable equipment and infrastructure necessary for the earthquake consequences elimination – *maximum design earthquake (MDE) with the intensity increase of 1% within 50-year period and the frequency of return equaling once per 5000 years.*

[1] The State enterprise "The Research Institute of Building Constructions" (SE NIISK) of Minregion of Ukraine, Kyiv, Ukraine: niisk-office@ndibk.gov.ua
[2] The Odessa State Academy of Civil Engineering and Architecture (OSACEA), Odessa, Ukraine
[3] The State Enterprise "Institute KrymNIIProekt" of Minregion of Ukraine, Simferopol, Ukraine
[4] Civil Engineering and Research Institute of Experimental Designing, Kyiv, Ukraine
[5] The S.I. Subbotin Institute of Geophysics (IGP) of the National Academy of Sciences of Ukraine, Kyiv, Ukraine
[6] Crimean Expert Council on the Seismic Hazard Assessment and Earthquake Forecasting, Simferopol, Ukraine

The Eurocode 8 recommends to assume the probability P_{NCR} = 10% for the earthquake action exceedance and the earthquake return period T_{NCR} = 475 years, which meets the requirements of the "*structure non-collapse /non fall*" without any local or global collapse. Such levels of damages correspond to the "*design-basis earthquake*" in EN. The safety level meeting the requirements of "*damage limitations*" shall be recommended for an action with the exceedance probability of 10% in 10 years and a return period of 95 years.

The geotechnical and earthquake resistance requirements are described in the following two Eurocodes: EN 1997 (Eurocode 7) and EN 1998 (Eurocode 8). In EN 1998-1 the general rules and requirements for designing the buildings and civil engineering works. The Nationally Determined Parameters to be applied for designing shall be included into the National Annexes.

In EN 1998-1 there is an analysis of the following methods applied for solving the building seismic stability tasks: linear static analysis; modal analysis of the response spectrum (in normative documents of Ukraine and CIS countries this method is usually called "*Spectral Method*"); non-linear static analysis (known as "*limiting strength calculation*" or "*Pushover Analysis*"); and non-linear dynamic analysis (step-by-step analysis of accelerograms).

The method of non-linear static analysis has become the most widespread as being the mostly acceptable for the seismic resistance theory application. For the practical use the procedures of seismic response assessment were developed based on the transformation of seismic action smoothing spectra and multidegree-of-freedom system into a system with a unique equivalent mass $\boldsymbol{M}_{\mathbf{eq}}$ and generalized horizontal stiffness $\boldsymbol{K}_{\mathbf{eq}}$.

The main principle of such transformation is defined by a few known schemes including the capacity spectrum method (ATC-40) [5], method of displacement ratio (FEMA 356) [6]; permanent ductility coefficient procedure (Chopra & Goel) [7]. The provisions of these documents are based on the procedures of capacity curves construction and values determination for characteristic parameters corresponding to specific levels of structure damages.

The new normative document of Ukraine DBN V.1.1-12:2013 is based on the method of designing the earthquake resistant buildings of the specified category of ductility. The method was elaborated at SE NIISK.

Formulae necessary for transformation are presented in ATC-40 [5]. The standard spectrum of the response is given in a form of the spectral acceleration S_a dependence on the natural oscillation periods T, s, or in a form of a diagram of dynamic factor β over the period T, s. The solution of the task on the kinematic disturbance at the building base [8] leads to the known relationships between the spectrum of displacements and accelerations.

$$S_a = \omega^2 S_d \tag{1}$$

or

$$S_{di} = \frac{T_i^2}{4\pi^2} S_{ai} g \tag{2}$$

where ω is a circular frequency of natural oscillations; T_i is an natural period of the i-s mode.

The decreased (reduced) response spectrum is constructed with the application of a ratio of reduction. The decreased response spectrum is calculated by multiplying every point of the spectrum by the respective reduction factors of R_A or R_V [9].

1. EXPERIENCE OF APPLICATION OF DBN V.1.1-12:2006 "CONSTRUCTION IN SEISMIC REGIONS OF UKRAINE"

The document DBN V.1.1-12:2006 "Construction in seismic regions of Ukraine" has been enacted since February 1, 2007 instead of SNIP II-7-81*, operating before [10].

The most serious problem of construction in seismically dangerous areas is the problem of designing and construction of buildings with enhanced number of stories and application of constructive decisions, which haven't been verified in practice. Designing and construction of buildings and structures, which aren't meeting fully requirements of existing norms, is carried out as for objects of experimental construction with obligatory scientific and technical support (documentation) of objects, the order of which is regulated by requirements of DBN V.1.2-5:2007 "Scientific and technical support of construction objects" [11].

SE NIISK performed researches on earthquake resistance ensuring for more than 200 projects of the various structural systems in many regions of Ukraine. The majority of studied objects represented

system of monolithic housing construction in a form of frame buildings without girders with pylons, diaphragms and the stiffening cores, built in Odessa, and buildings with frame frameworks or with monolithic walls, built in AR Crimea (Yalta, Simferopol and others). The Norms for designing the high rise residential and public buildings having the heights from 73,5 m up to 100 m were also elaborated for civil engineering in regions with seismic intensities of 5 and 6 points [12].

2. MAIN FEATURES OF NEW EDITION OF DBN V.1.1-12:2013

During 2006-2013 from planning and scientific institutions of Ukraine remarks (commentaries) and offers concerning basic provisions of DBN V.1.1-12:2006 were received.

Revision of construction norms is aimed on normative providing of designing of buildings and constructions with the set level of ensuring of seismic stability, designing of systems of seismic isolation of buildings of different function, justification of strengthening and reconstruction of constructions, damaged during earthquakes.

First of all it concerns the following provisions:

- determination of seismic loads using non-linear deformation of materials and structures;
- applications of nonlinear calculation for constructions with use of capacity spectrum method, recommended by [4,5,6];
- correction in the use of General Seismic Zoning maps of the territory of Ukraine taking into account importance classes for buildings and constructions designed in the seismic regions of Ukraine;
- more precise definition of requirements to seismic micro-zoning of building sites;
- detailed calculations of buildings and constructions for seismic impact assigned by earthquake accelerograms (time-history analysis);
- setting design requirements for seismic isolation systems and others.

DBN V.1.1-12:2013 establish obligatory requirements, which it is necessary to observe at designing, construction, reconstruction and maintenance of buildings and structures of different function, built or placed on sites with seismicity 6 points and higher by scale of seismic intensity according to DSTU B V.1.1-28, with the purpose of safety of people and safety of material and cultural values at seismic influences.

For the purpose of harmonization of requirements of normative documents of Ukraine with provisions of European norms, new edition of DBN at designing of economical seismic constructions with providing of specified level of safety is recommended to use an engineering technique, which allows to consider nonlinear work of construction materials of at seismic influences on the basis of capacity spectrum method and inelastic spectra of reaction (fig. 1).

The developed technique showed good compliance with results of natural dynamic tests and with direct nonlinear dynamic calculation of buildings, and also with results of calculation according to techniques, containing in Eurocode 8 and in normative documents of the USA. The technique can be applied as at designing of the new buildings, located in seismic zones, and at an assessment of seismic stability of existing buildings with received damages of constructions.

Dynamic characteristics of the building (the periods and forms of free oscillations, damping coefficients) change at intensive seismic influences as a result of degradation of stiffness of construction. For determination of rigidity of plane-stressed wall and bar reinforced concrete constructions, taking into account available cracks, a new method is offered. The scheme of cracks is plotted on calculated construction: real scheme by results of investigation of building after an earthquake (fig. 2,a where 1 - border of horizontal strips; 2 - cracks; 3 - opening), or received scheme by results of nonlinear static calculation. Basis of approach is the method of single strips with use of the theory of assembled bars of A.R. Rzhanitsyn [13]. By means of method of section, a vertical single strip cuts out (see fig. 2,b where 1 - transversal ties; 2 - pliable seams), which is calculated according to scheme of a assembled bar with monolithic seams between horizontal strips in the absence of cracks and between pliable seams - in the case of presence of cracks in construction.

Work of forces of indicated single strip without cracks W_1 (with use of method of finite elements - single size is replaced by value Δx), and also work of forces of single strip with considering of cracks - are determined. Work of ties, shears and cross ties is considered. The difference between works $\Delta W=W_1-W_2$ is distributed on next strips or on finite elements (FE), adjacent to cracks from top and from bottom.

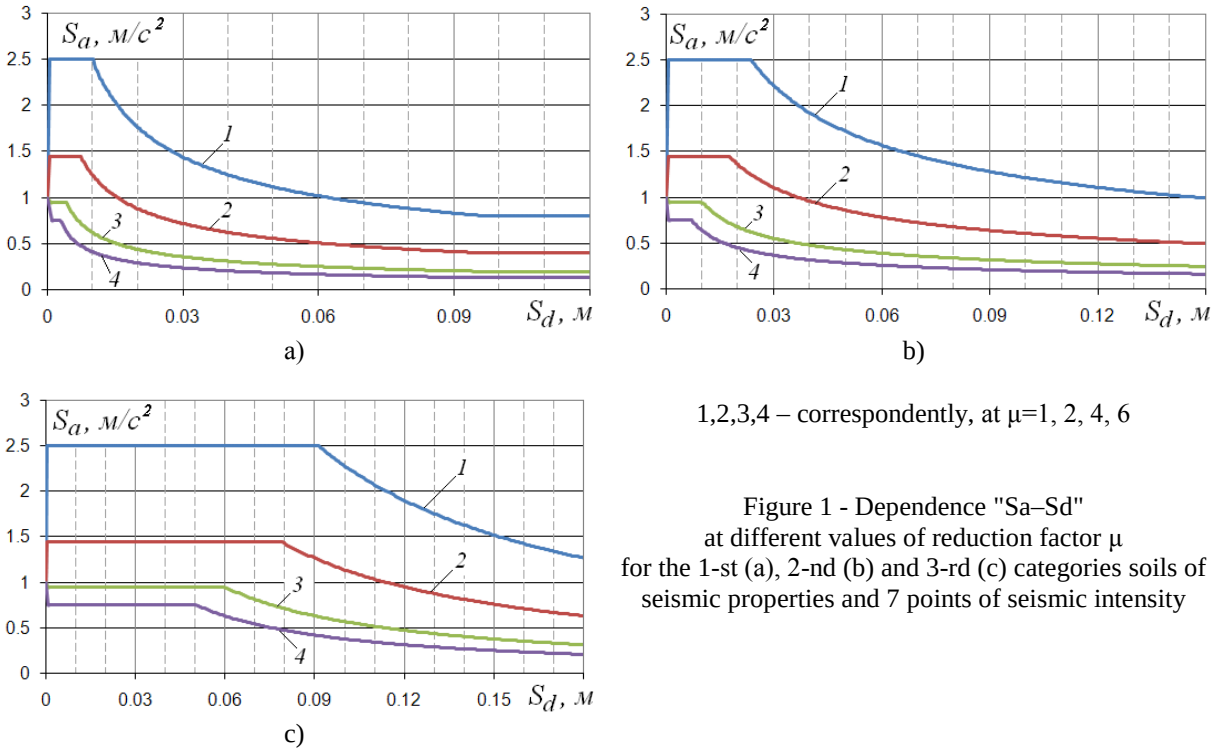

1,2,3,4 – correspondently, at μ=1, 2, 4, 6

Figure 1 - Dependence "Sa–Sd"
at different values of reduction factor μ
for the 1-st (a), 2-nd (b) and 3-rd (c) categories soils of seismic properties and 7 points of seismic intensity

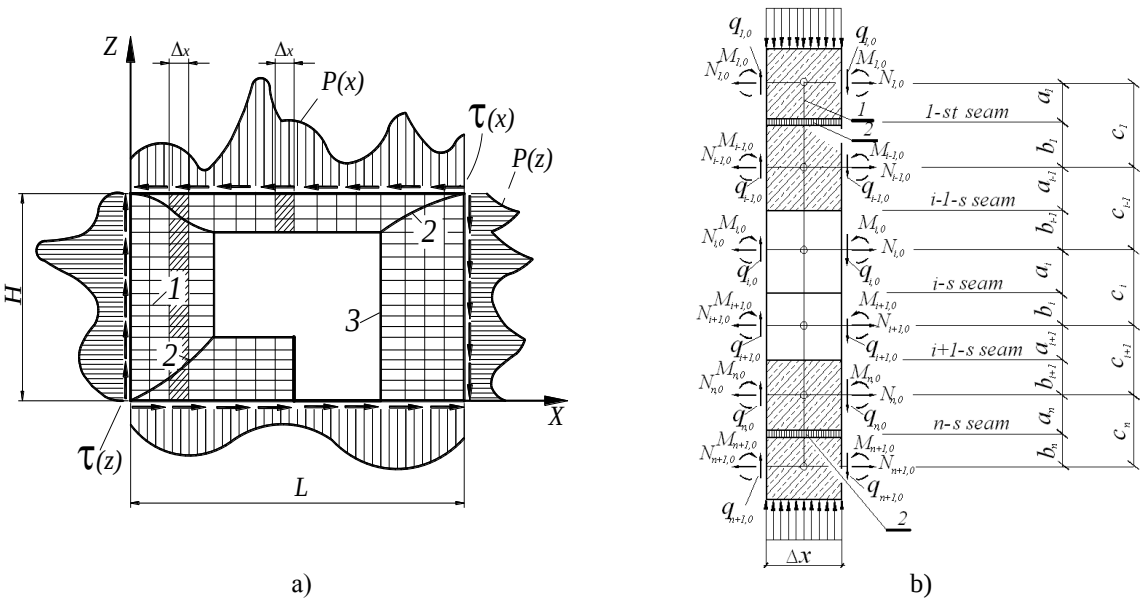

Figure 2 - Calculation of plane stress reinforced concrete structures with openings for seismic action (a) and the vertical unit band which is considered using the scheme of compound (b):
1 - limits of horizontal bands; 2 - cracks; 3 – opening

The algorithm of calculation allows existence of iterative process, regulated by the reached accuracy of thickness of noted finite elements and dynamic characteristics of building (frequencies and modes of free oscillations).

At setting of admissible inter-story drifts, it has been studied more than 80 documents where 54 documents on seismic construction of 40 countries, Eurocode-8, IBC and UBC, 28 releases with the results of experimental studies carried out in the USA, Great Britain, Japan, Canada, China and countries of European community. The study has shown limitations of inter-story drifts stated in [1] are conservative and comply largely with performance level of minor earthquake (ME) instead of design-basis earthquake (DBE). There are the values of permissible inter-story drifts for three performance effect levels (Table 1).

Table 1 – Limitations of inter-story drift – Proposals

Structural layout of buildings	Inter-story drift for performance level		
	Minor earthquake (ME)	Design-basis earthquake (DBE)	Maximum design earthquake (MDE)
Steel framework	0.0067	0.012	0.02
Reinforced concrete framework without vertical diaphragm or stiffening core	0.0067	0.012	0.03
Reinforced concrete framework with vertical diaphragm or stiffening core	0.004	0.017	0.025
Frameless reinforced concrete site-cast, large-panel and large-block buildings	0.0028	0.01	0.02
Frameless buildings with masonry or reinforced masonry walls	0.0025	0.004	0.008
Frame-masonry buildings	0.0025	0.004	0.008

New edition of DBN contains the section on designing of systems of seismic isolation of buildings and constructions of different function. In the section, the passive system of seismic isolation of buildings and structures, which doesn't require additional power sources for ensuring of damping of fluctuations is considered.

At calculations of buildings with system of seismic isolation it is recommended to apply spatial or flat dynamic design model of system "base – foundation – seismic supports –structure" (figure 3).

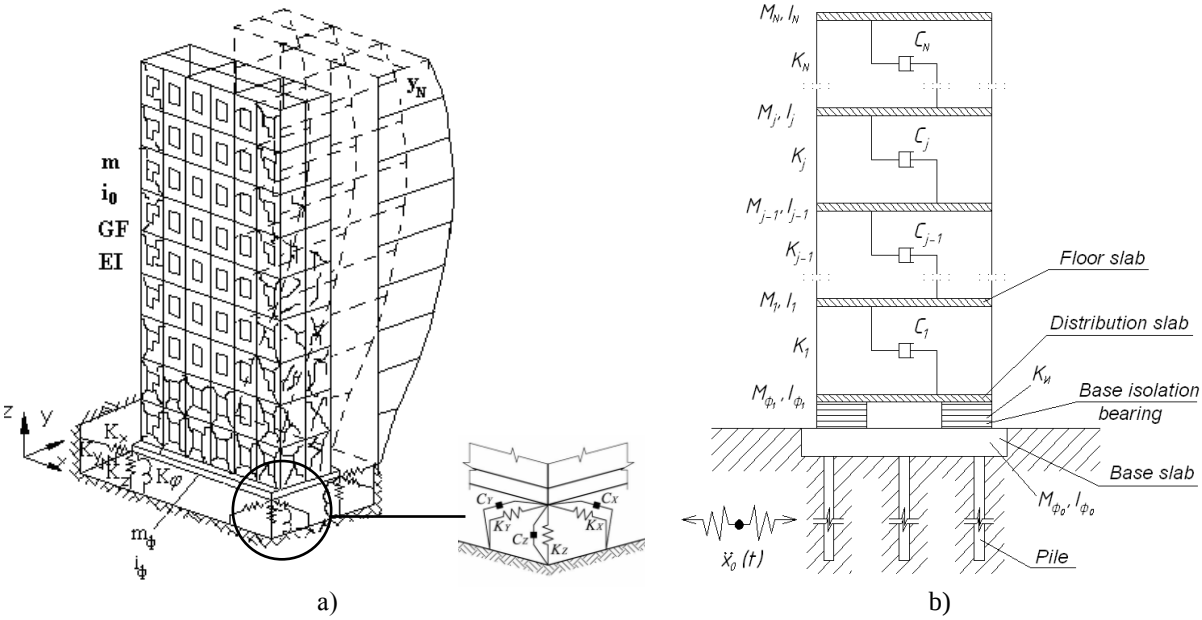

$M_ф$, $I_ф$ – the mass and the moment of inertia of mass of foundation;
Mj, I_j, K_j, C_j – respectively, mass, moment of inertia of mass, stiffness and damping of j-th floor of building.

Figure 3 - Spatial dynamic model of building on seismic supports (a) and plane model in section along height (b)

Design spatial dynamic model of system "base – foundation – seismic supports – structure" is developed taking into account nonlinear work of materials of constructions of over-ground structure and foundation, actual stiffening and damping characteristics of seismic supports, determined by results of tests. Direct dynamic calculations thus should be carried out for influences, which have been set by accelerograms of a building site, generated on the basis of results of works on seismic micro-zoning.

3. NUMERICAL RESEARCHES

Comparison of results of calculation of buildings with application of recommendations of different normative documents and of design methods is carried out. Three objects with different constructive

schemes, of numbers of stories, located in regions with different seismicity and soil conditions are considered.

3.1 Objects of researches

Object № 1 – 16 story residential house in Odessa' region. According to classification of soils by results of engineering-geological researches and to table 1.1 of DBN V.1.1-12 - soils of building site belongs to the third category by seismic properties. By results of executed researches on seismic micro-zoning, seismicity of building site is 7 points.

Building configuration in plan – rectangular, close to square, with overall dimensions in axes – 23.60×25.85 m and with height 52.77 m. Heights of floors oi: basement floor – 3.3 m; inhabited floors from 3rd to 16th – 3.0 m.

Constructively, the building is designed in monolithic reinforced concrete framework according to frame-braced scheme. Bearing elements are:

- columns - section 750x300mm and 600x300mm in basement and on inhabited floors and 250x250мм in upper level, concrete of class C20/25, longitudinal reinforcement A400C, lateral reinforcement A240C;
- floors without girders and roof with thickness - 200 mm, concrete C20/25, reinforcement A400C;
- stiffening diaphragm - monolithic/reinforced concrete with thickness 200, 250 and 300mm, concrete of class C20/25, longitudinal and lateral reinforcement A400C.

Foundations - piles reinforced concrete prismatic with length of 12 m. Mattress - monolithic, reinforced concrete, thickness 1000 mm, concrete of class C20/25, longitudinal and lateral reinforcement A400C.

Object № 2 – 5 story masonry building with basement floor is designed for construction in Mukacheve, trans-Carpathian area. According to classification of soil by results of engineering-geological researches and to table 1.1 of DBN V.1.1-12, soils on building site belongs to the second category of seismic properties. Design intensity of seismic influences for Mukacheve is 7 points.

Building configuration in the plan – rectangular, with overall dimensions in axes – 44.5×10.5 m and height of 20.9 m. Height of inhabited floors is 3.0 m; the basement floor – 2.0m.

Bearing elements of the building are:

- longitudinal and transversal brick walls: external – with thickness 640 mm, internal – 380 and 250 mm;
- walls of basement floor – monolithic reinforced concrete with thickness 600 mm, concrete of class C20/25;
- floors and roof - 220 mm of thickness, concrete C20/25, reinforcement A400C.

Object № 3 – 9 story large-panel residential building on the basis of technology of Mittatyö firm (Finland) for construction in Simferopol. According to classification of soils by results of engineering-geological researches and to table 1.1 of DBN V.1.1-12, soils of the building site belongs to the second category by seismic properties. Design seismicity of building site is 7 points.

The building has 9 floors and the overall sizes in plan 49.8x15.5 m. Form of plan - rectangular with ledges in plan, not exceeding 2 m. Number of longitudinal walls – 4, 2 of them - internal, through with distance between them – 4.4 m. Step of lateral walls – 3.3; 3.4; 3.5 and 3.9 m; step of longitudinal walls – 5.0; 4.4; 4.0 and 2.1 m. Height of a standard story - 2,8 m.

The constructive scheme – flat-wall in two directions with floors from precast hollowcore extrusion slabs, joined by monolithic reinforced concrete binding in a rigid disk.

Walls – are made of large reinforced concrete panels: external panels - three-layer panels with one internal bearing layer and internal slabs – made of single-layer large reinforced concrete panels.

Foundations - monolithic reinforced concrete crossed strips, arranged on the surface concrete mat; connection bars are provided for fastening of wall panels of ground floor.

3.2 Models and calculation methods

On the basis of design materials three-dimensional computer models of buildings (fig. 4) are developed. Design models are taken in the form of spatial system and reflect constructive decisions of considered buildings and include the rod elements and envelope finite elements (FE).

For object №1, assessment of influence of basement soil on seismic reaction of construction is executed. For these purposes, calculations of model with rigid fixing of over-ground part in soil and with considering of the basement soil are executed. Interaction of top structure with soil is considered

by means of use of finite elements in a form of one-joint elastic connections, modeling repulse of soil along lateral surface of piles and under their basis.

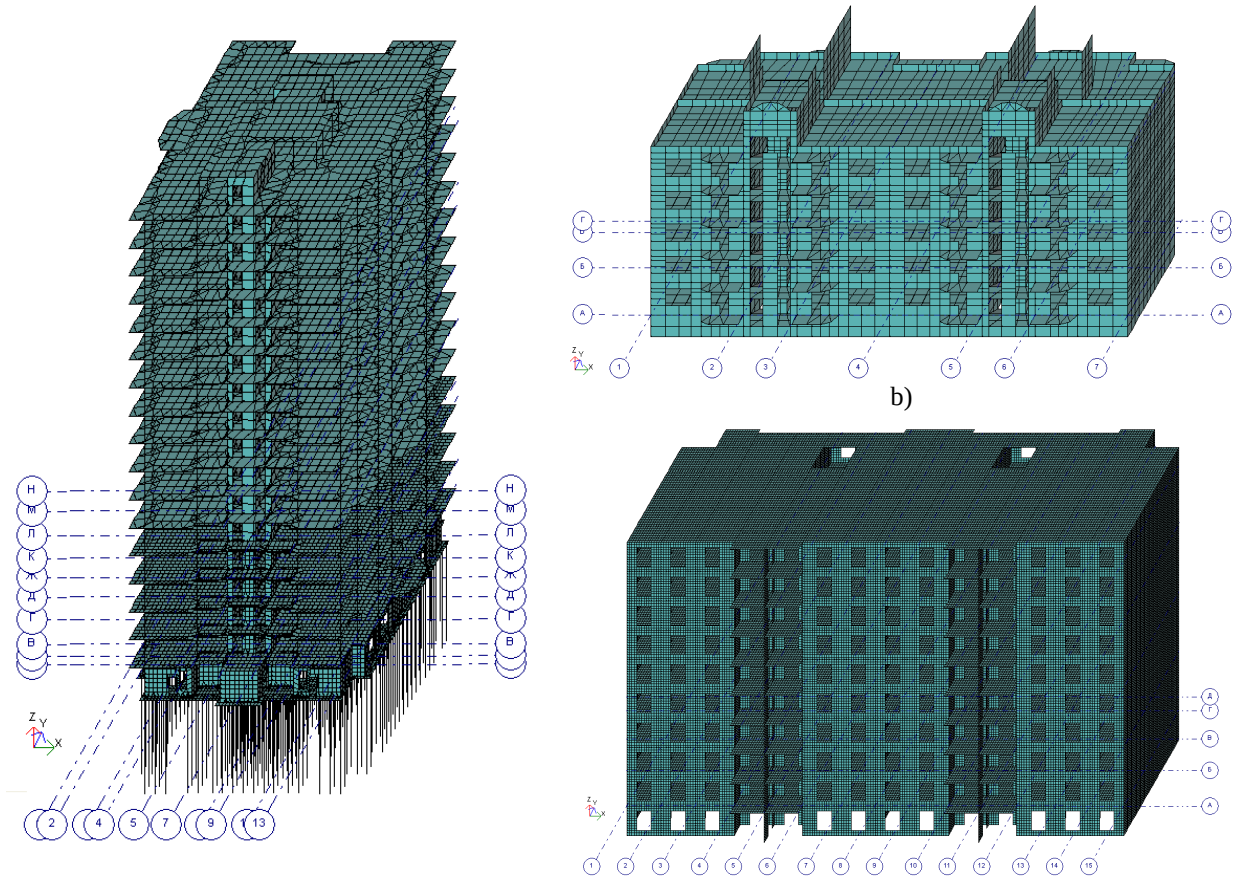

a) b) c)

Figure 4 – Spatial design models:
a – 16 story frame building; b – 5 story masonry building; c – 9 story large-panel building

All calculations are executed with use of the program complex "LIRA CAD" [14], which is computer system for structural analysis and designing of buildings.

Calculations are executed with use of the following methods:

1. spectral method according to:
   - new edition of DBN V.1.1-12:2013;
   - SP 14.13330.2011 "Construction in seismic regions" (standard of Russian Federation) [15];
   - EN 1998-1:2004 Eurocode 8;
2. nonlinear static method according to:
   - Annex G of new edition of DBN V.1.1-12-2013;
   - Annex B, EN-1998-1;
3. time-history analysis with use of accelerograms according to new edition of DBN V.1.1-12:2013.

As a seismic load for time-history analysis of 16-floor frame buildings in Odessa accelerogram *aap11c_vrn*, synthesized by Institute of geophysics of NAS of Ukraine taking into account results of seismic micro-zoning of building site for possible influences from a zone of Vrancea (fig. 5) is accepted.

3.3 Spectral method calculation results analysis

The spectral method calculation results with consideration of different normative document requirements are given in Table 2. There are calculation results of the following:

- prevailing vibration period T, sec;
- sum of masses taken into account in the calculation, Q, tf;
- total inertial loads S, tf;
- maximum displacement of top level of design model, d_{max},, mm.

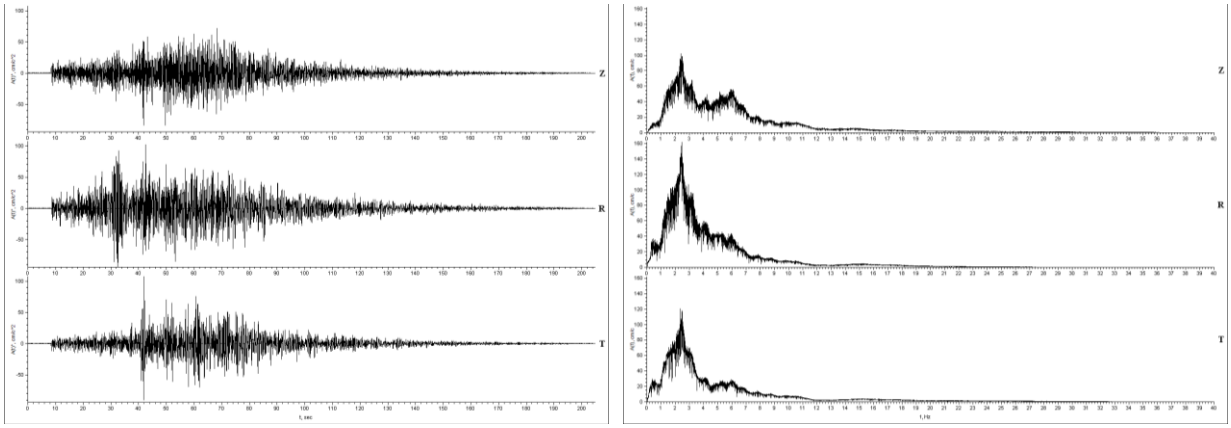

a) b)

Figure 5 – Accelerogram *aap11c_vrn*, modelling fluctuations of soil from zone of Vrancea (a) and its amplitude spectrum (b) for vertical (Z) and horizontal: radial (R) and tangential (T) components

Table 2 – The spectral method calculation results

Object	**Normative document**			
	DBN V.1.1-12:2013			
	***T*, sec**	***Q*, tf**	***S*, tf**	**d_{max}, mm**
Object No.1	1.604	12774	516.9	61.9
Object No.2	0.157	5519.2	361.1	1.22
Object No.3	0.245	4291.2	1937.4	6.51
	SP 14.13330.2011			
	***T*, sec**	***Q*, tf**	***S*, tf**	**d_{max}, mm**
Object No.1	1.604	12774	381.2	45.7
Object No.2	0.157	5519.2	382.7	1.16
Object No.3	0.245	4291.2	1562.5	5.25
	EN-1998-1			
	***T*, sec**	***Q*, tf**	***S*, tf**	**d_{max}, mm**
Object No.1	1.608	12807	307.4	37.1
Object No.2	0.161	5721.8	387.1	1.25
Object No.3	0.252	4538.7	2595.5	8.8

The results analysis shows that in according with different normative documents the analogues results are obtained for modal characteristics and sum of masses. The spectral method calculation results obtained in accordance with DBN, SP and EN are in good agreement with each other for a 5-story building. There are differences in values of 68% between DBN and EN and 35% between DBN and SP by total inertial loads and maximum displacements for multistory buildings (objects No.1 and No.3). This difference is explained mainly by a story factor of k_3, which is used in DBN for buildings of more than 5 stories and absent in determination of seismic inertial loads in EN and SP.

Factor k_3 used for buildings of more than 5 stories is determined by the following equation:

$$k_3 = 1 + 0.04 \cdot (n - 5), \quad (3),$$

where n is a number of stories in the building.

Maximal value of k_3 is not more than 1.6 (also for frame, frame-braced and braced systems) and not more than 1.5 for wall and frame-wall structure systems.

In Table 3 there is a comparison of results obtained in accordance with requirements of different normative documents. Thus, "DBN / SP" means that the parameter value obtained in accordance with DBN is divided by analogues value obtained in accordance with SP.

Difference between parameters obtained in accordance with DBN and EN can be reduced if in calculation realized in accordance with EN the Ukrainian territory dynamism spectral coefficient graphs (normative response spectrum graphs) are used in accordance with DBN. In Fig. 6 there is a comparison of the given graphs depending on seismic characteristic ground category and predominant object vibrations period. According to 3.2.2.2(2)P EN-1998-1 the response spectrum parameters are given in National Attachment in accordance with local ground conditions. Thus, if in EN-1998-1

spectral method calculations the dynamism coefficient graphs are used, according to DBN the difference of values is 4% for objects No.3 and 49% for object No.1.

Table 3 – Comparison of spectral method calculation results

Object	**Normative document / parameter**			
	DBN / SP			
	T	***Q***	***S***	d_{max}
Object No.1	1	1	1.35	1.35
Object No.2	1	1	0.94	1.05
Object No.3	1	1	1.23	1.24
	SP / EN			
	T	***Q***	***S***	d_{max}
Object No.1	0,997	0,997	1.24	1.23
Object No.2	0,975	0,965	0.98	0.92
Object No.3	0,972	0,945	0.60	0.59
	DBN / EN			
	T	***Q***	***S***	d_{max}
Object No.1	0,997	0,997	1.68	1.66
Object No.2	0,975	0,965	0.93	0.97
Object No.3	0,972	0,945	0.75	0.74

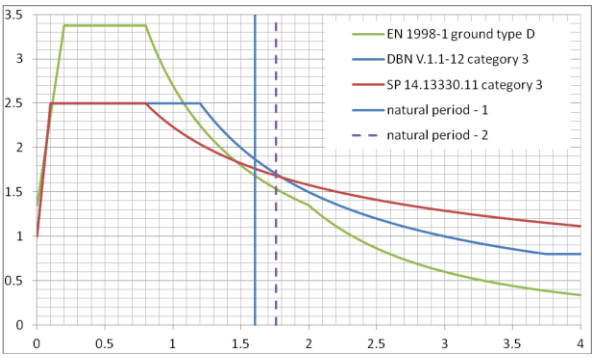

a)

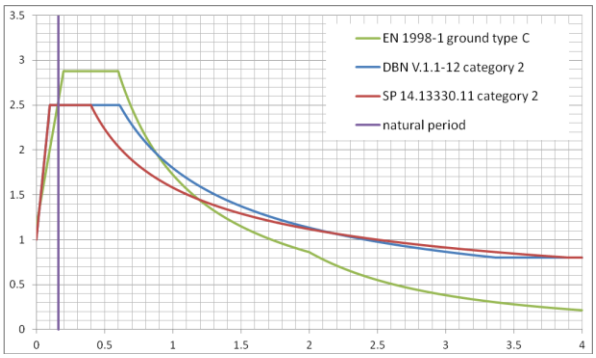

b)

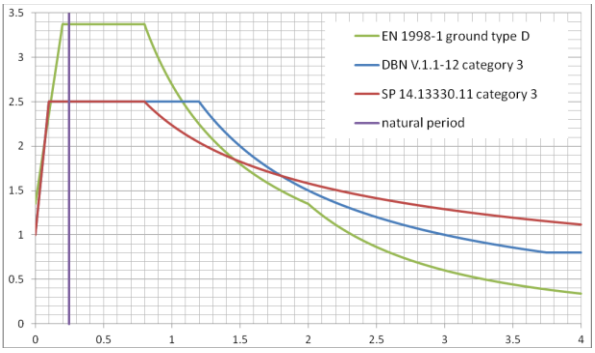

c)

Fig. 6. Comparison of graph ordinates of normative response spectrum for the following objects:

a) 16 story frame building;
b) 5 story brick building;
c) 9 story large-panel building.

In Fig. 6a the solid vertical line corresponds to predominant 16 story building model vibration period obtained at rigid fixing in ground, and dotted line corresponds to predominant 16 story building model vibration period obtained at consideration of ground base. In Table 4 there is comparison of spectral method calculation results for two given variants.

3.4 Non-linear static calculation results analysis

In Fig. 7 there is a graphic representation of results: comparison of 16 story building capacity spectrum graphs and equivalent single-mass (normative and design accelerograms (under influence)) system response graphs. Points of capacity spectrum graphs and response graphs intersection correspond to displacement caused by seismic action at a level of the building from top to bottom, where the coefficient η_i is equal to one depending on natural building vibration forms.

Table 4. Comparison of spectral method calculation results

Calculation method	Parameter	Variant	
		1 – rigid fixing	2 – consideration of the base
DBN V.1.1-12:2013	*T*, sec	1.604	1.76
	Q, tf	12774	12774
	S, tf	516.96	526.98
	d_{max}, mm	61.99	72.82
SP 14.13330.2011	*T*, sec	1.604	1.76
	Q, tf	12774	12774
	S, tf	381.29	407.2
	d_{max}, mm	45.71	56.2
EN-1998-1	*T*, sec	1.608	1.77
	Q, tf	12807	12807
	S, tf	307.4	313.1
	d_{max}, mm	37.1	43.5

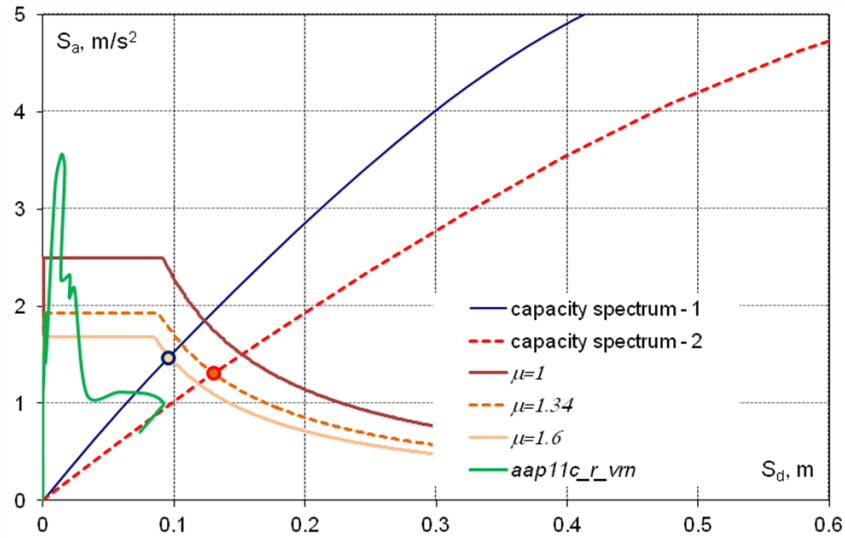

Fig. 7. 16 story building non-linear static calculation results

According to graph in Fig. 7 the capacity spectrum for variant of base consideration is characterized by higher values of displacements at analogues levels of loading in comparison with variant of rigid fixing.

In Fig. 8 the capacity spectrum approximation is represented by bilinear diagram in accordance with the method of non-linear (target) displacements determination (Attachment B EN-1998-1).

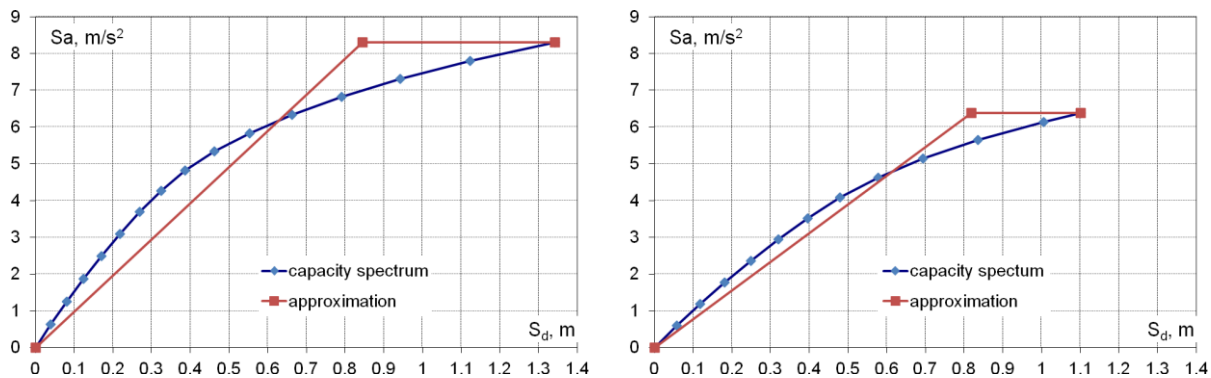

a) b)

Fig. 8. Building capacity spectrum approximation for the following variants:
a) rigid fixing; b) with consideration of base deformations

The non-linear static calculation results in a form of maximal building displacements at a level of upper flooring are given in Table 5. In the table there are also maximal model top displacement

values obtained due to results of non-linear dynamic calculation using the accelerogram *aap11c_vrn*. The design model of system "ground base – foundation – structure" includes the ground base, foundation pile structures, connected by grillage, and load-bearing aboveground structures.

Table 5. Maximal design model top displacement (mm) values

Variant	Normative document			
	DBN V.1.1-12-2013			EN-1998-1
	Normative spectrum (μ=1)	Non-linear spectrum (μ≠1)	Accelerogram	
1 – rigid fixing	192.3	161.2 (μ=1.6)	-	238.9
2 – consideration of the base	226.1	183.9 (μ=1.34)	166.3	248.2

According to Table 5 the capacity spectrum approximation by EN-1998-1 method is a result of displacements reassessment and practically similar results for design models with and without consideration of the base. Consideration of the base in calculation using DBN method leads to increase of design model displacements by 14%.

According to item 6.3.7 of new edition of DBN the building deformability observed during seismic action and determined by inter-story drift should not be higher than allowed values depending on construction solution (see Table 1).

For considered object No.1 the minor earthquake level corresponds to 6 points and design-basis level corresponds to 7 points on a scale [2]. Comparison of maximal values of inter-story drift obtained by calculation with allowed values is given in Table 6 and in Fig. 9.

The analysis of data given in Table 6 and in Fig. 9 shows that conditions of deformability for inter-story drift satisfied at DBE seismic action and are not satisfied at ME seismic action.

Table 6. Maximal values of design model inter-story drift

Variant	Non-linear calculation			Inter-story drift allowed value for DBE (ME)
	Normative spectrum (μ=1)	Non-linear spectrum (μ≠1)	Accelerogram	
1 – rigid fixing	1/228	1/285 (μ=1,6)	-	1/100 (1/357)
2 – consideration of the base	1/193	1/239 (μ=1,34)	1/267	

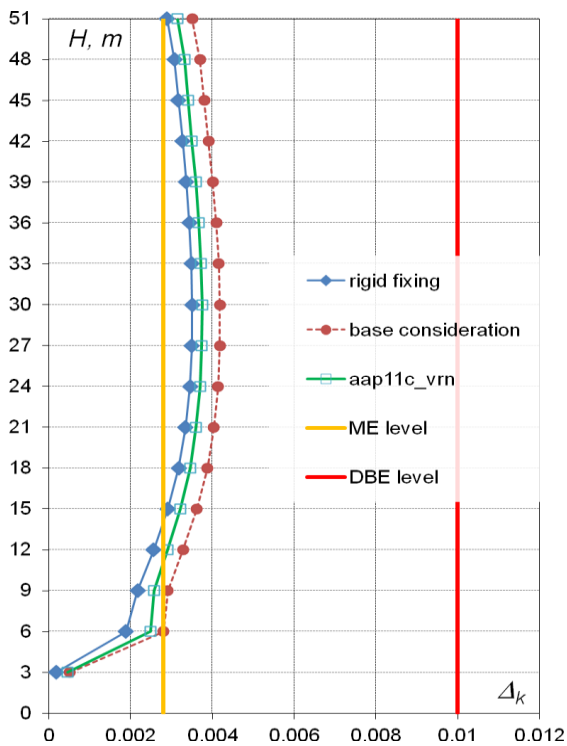

Fig 9. Comparison of obtained inter-story drift values with allowed values for ME and DBE seismic actions

CONCLUSIONS

The main features of new edition of Ukrainian Code DBN V.1.1-12:2013 "Construction in the seismic regions of Ukraine" is presented in paper. Methodology for designing of the quakeproof buildings with prescribed plasticity category is considered here. This methodology is basing on usage of non-linear static analysis procedure ("Pushover Analysis") and non-linear design spectrums.

New method is proposed for determination of rigidity of the stressed wall and rod reinforced concrete structures taking into account the existing normal and inclined cracks. This method permits to determine a change of the building dynamic behavior because of structures degradation when intensive seismic actions.

Comparison of the calculation results of the seismic reaction (displacements and tilts) for three types of buildings (frame and frameless) with different number of stories is carried out by methodology of EN 1998-1 and new Ukrainian Code DBN V.1.1-12:2013. There is shown that calculation results of spectral method gotten by both Codes are correlating well for low story buildings (up to 5 stories). The difference between DBN and EN results for multi-story buildings is explained mainly by a story factor of k_3, which is used in DBN for buildings of more than 5 stories and absent in determination of seismic inertial loads in EN. Comparison of the calculation results for 16 story building taking into account its base carried out accordingly to new edition of DBN and annex B of EN-1998-1 has shown that capacity spectrum approximation by EN-1998-1 method is a result of displacements reassessment and practically similar results for design models with and without consideration of the base. Consideration of the base in calculation using DBN method leads to increase of design model displacements by 14%.

REFERENCES

1. DBN V.1.1-12:2006. Construction in the seismic regions of Ukraine/Ministry of Construction of Ukraine. – Kyiv: 2006. -82 p.
2. DSTU B V.1.1-28:2010. Protection against hazardous processes, harmful operation impacts and fire. Scale of seismic intensity. Ministry of Construction of Ukraine/ Ukraine. - 47 p.
3. DSTU-N B V.1.2-16:2013. Assessment of importance classes and complexity categories of construction projects. Ministry of Construction of Ukraine / Ukraine. – 2013. - 26p.
4. EN 1998-1:2004 Eurocode 8. Design of structures for earthquake resistance. Part 1: General rules, seismic actions and rules for buildings /CEN/ European Committee for Standardization. – Brussels.
5. ATC-40. Seismic Evaluation and Retrofit of Concrete Buildings - Volume 1 and 2, Applied Technology Council. Report No. SSC 96-01, Seismic Safety Commission, Redwood City, CA. – November 1996.
6. FEMA 356. Prestandard and commentary for the seismic rehabilitation of buildings. American Society of Civil Engineers (ASCE), Washington, D.C. - November 2000.
7. Chopra A.K. Earthquake dynamics of structures. Second Edition. - University of California, Berkeley. – 2005. - 129 p.
8. Nemchynov Iu. Seismic resistance of buildings and facilities. Two parts: - Kyiv, 2008. – 480 p.
9. UBC – 1997. UNIFORM BUILDING CODE™. Volume 2. Structural Engineering Design Provisions, 1997: International Conference of Building Officials. – U.S.A. - 1997.
10. SniP II-7-81*. Construction in seismic regions / Gosstroy of the USSR. – M.: Central institute of standard designing, 1991. – p. 50.
11. DBN V.1.2-5:2007. Scientific and technical support of building objects. – The Ministry of construction of Ukraine - Kyiv: 2007. – p. 14.
12. DBN V.2.2-24:2009. Design of high residential and public buildings. - The Ministry of construction of Ukraine - Kyiv: 2009. – p. 156.
13. Rzhanitsyn A.R. Compound bars and plates –M.: Stroyizdat, 1986. – p. 316.
14. LIRA 9.4. User guide. The basics.Instructions. Strelets-Streletskiy E.B., Bogovis V.E., Genzerskiy Yu.V., Geraymovich Yu. D., Marchenko D.V., Titok V.P. - Kiev: “FACT”, 2008.
15. SP 14.13330.2011. Design rules for residential and public buildings for construction in seismic areas. Construction and design code. – Moscow: Center of design documentation for construction, 2005. – 42 p.