SECOND EUROPEAN CONFERENCE ON EARTHQUAKE ENGINEERING
AND SEISMOLOGY, ISTANBUL AUG. 25-29, 2014

SEISMIC ASSESSMENT OF "BARACCATO" SYSTEM: CONSTRUCTIVE ANALYSIS AND EXPERIMENTAL INVESTIGATIONS

Nicola RUGGIERI[1] and Raffaele ZINNO[2]

ABSTRACT

In the XVIIIth C., the Reign of Naples represents, relatively to the anti-seismic engineering, one among the most advanced states of Italy. The Borbone scientists, due to the repeated earthquakes, that in particular struck the Southern part of the reign, "privilege" researches finalized to improve the resistance of the buildings under dynamic actions. Those studies as well as the consequent discoveries have applications in the Calabria region and, above all, represent the base for the first European anti-seismic code, that was prescribed by Ferdinando the IVth of Borbone, after the catastrophic Calabrian telluric event of February and March 1783.
Such a constructive system, characterized by masonry embraced by timber frames, was identified, in the XIXth C., as "*Casa Baraccata*".
In the first part, the report deals about constructive details, characterizing the edifices of the XVIIIth C, that ensure to the building a proper answer under earthquake excitation.
The main anti-seismic principle pursued by the age of the Enlightenment technicians in the Calabria region was the connection among the intersecting walls with the awareness aim to obtain a "box" behaviour of the edifices. This is achieved by means of a timber frames inside the masonry in which the in plane restraint is provided by horizontal member of the frame, that are prevented from moving laterally by the stone work and above all the stiffness relating to actions parallel to the panel is given by the infill masonry;

Figure 1. A *baraccato* building in Reggio Calabria

[1] Architect, University of Calabria, Cosenza, Italy, nicola.ruggieri@unical.it
[2]Professor, University of Calabria, Cosenza, Italy, raffaele.zinno@unical.it

in other examples the lateral resistance is obtained thank to the presence of timber Saint Andrew crosses.
Other devices realized to connect the walls of the buildings are the beams of the intermediate floors. These are executed with notches at the end of the member to strengthening the node beam-wooden ring and guarantee, together the latter, a resistance to out-of-plan actions.
The roof is characterized by king post truss or other types of timbers arrangement that ensure the absence of outward thrust, particularly un-safe for the edifice during the earthquake action. The quoins and in general the angle bracket area was kept in account by the Borbone Engineers to prevent overturning of the panel under out of plane action and to improve in general the horizontal force response of the constructive system.
Moreover the document devotes its attention to the analysis of other data concerning the shape building features, such as in plan and elevation regular distribution, a low height of the facades and regarding the analysis of the timber frame joints and their contribute under dynamic actions.

Figure 2. Cyclic test on a full scale specimen of Borbone system

Those overall elements give to the Borbone constructive system a low vulnerability under seismic excitation. In fact the buildings characterized by the *baraccato* system, counteracted two high intensity earthquakes in 1905 and 1908, with slight damages, proofing a proper anti-seismic behaviour.
This satisfactory performance was validated by cyclic loading tests.
In September 2013, an experimental campaign was performed at the Cnr Ivalsa laboratory in Trento as a result of a research cooperation between Cnr Ivalsa and University of Calabria.
This involved quasi-static cycling tests according to UNI EN 12512:2003 on two full scale specimens of "*casa baraccata*", the first one constituted by masonry reinforced with timber frame and another one characterized only by the timber frame, empty of the masonry infill. The latter was tested to interpret the mechanical contribute of the framing to the Borbone anti-seismic system. The herein manuscript illustrates the experimental outcomes, such as ductility, energy dissipation, equivalent viscous damping ratio, strength impairmentand consequently a qualitative and quantitative analyses about the cyclic behaviour of the "*baraccato*" system.

INTRODUCTION

The Calabria region was strike by a terrible earthquake in 1783 that caused a large number of victims and many damages to the buildings with towns and villages totally razed to the ground. After few months the Borbone government enacted that the constructive system, for a safely reconstruction, must be masonry embraced by timber framing. That provision together with other anti-seismic devices were applied in the reconstruction programme, in other words in the execution of buildings according to *Casa Baraccata* rules. It is worth observing that those criterion and principles relied on a proper

knowledge of the construction behaviour under seismic action widely spread among the Neapolitan scientists during the Enlightenment age.
Furthermore an experimental campaign performed in 2013 on two full scale specimens of Borbone constructive system assessed its behaviour under reversed cyclic loading, providing data, in a certain way, of the dynamic response of a *Casa Baraccata* sample.
In the scientific literature a lack of constructive investigation characterizes the *Borbone* system, in fact the research is principally concentrated in two, not recent, works of Tobriner (1983) and Barucci (1990). In those cases the analysis is mainly limited to historical aspects with few data regard to the seismic vulnerability. D'Ayala et al. (2011) present a review of different historical types of connection perpendicular walls and point out their influence, also by means of calculations, in the dissipation of seismic energy in the global structural system; in particular in the manuscript is analysed the corner building described by Vivenzio, an Enlightenment author that can be considered one of the theoretician of the "Casa Baraccata". The *Case formate di legno*[3] of Vivenzio represents the topic of a paper written by the authors (2013), in which is highlighted, both from an historical and constructive point of view, that particular earthquake resistant prototype constituted by masonry reinforced with, in this specific case, a couple of wooden framings.
Therefore, in general, an almost complete lack of expertise is recorded about the seismic assessment of the Borbone timber framed wall both concerning in modelling and experimental investigations. Few publications relative to cyclic experimental tests performed on a specimen of Borbone constructive system are present in literature. A preliminary report on the tests conducted at CNR Ivalsa laboratory in Trento has been written by the authors (2013) in which are provided some data on the experimental campaign.

SEISMIC ASSESSMENT BY CONSTRUCTIVE ANALYSIS

In ancient time, in case of dynamic actions, a correct edifice behaviour cannot prescind from the timber employment[4], the latter was recommended by several writers of treatises as the unique material fundamental in the bond of the load bearing members constituting the structural system.
One of the first authors concerning in the issue was Alberti, recommending to form an *Ossatura,* i.e a skeleton in the building and afterwards by Palladio, that recognized to the tie beam of the truss, a common covering support in Italy, the task of "*a kind of ligament of the whole work*"; even if at the time no explicit principles for the construction in seism prone areas were established. In the XVIII C. the Neapolitan scientists had experienced multiple and high intensity earthquakes, through observations of damages occurred to the constructions, in other words with an empirical attitude, could proper interpret the building behaviour during a telluric event. Therefore the scholars of Naples Reign had intuited that a seismic reliability could be achieved through a "box" behaviour of the building. The latter represents a principle, widely pursued in the Borbone system mainly by means of *«…la connessione dei legni…»*[5] (Vivenzio, 1783). Such a mutual connection ensures a global spatial response, i.e. the construction can work in 3 planes in which play an important role the more stiffen "in-plane" walls. On this purpose it is worth emphasizing a particular care in the execution of the angle bracket area of some *Casa Baraccata* specimens. Regard to that, finalized to transfer the seismic action from structural elements working in out-of-plane to shear panels, the corner of the Palazzo del Vescovo of Mileto[6] (Italy) is characterized by the presence of timber lacings that try to ensure a bond between the two orthogonal panels. Even if the joint members, simply superposed, cannot transfer tension and in general only limited stress among the connected walls. A most effective solution is represented by another timber framed building in Mileto; in that case the connection is guaranteed by

[3] It is the anti-seismic prototype presented by Vivenzio in his treatise, *Istoria e teoria de' tremuoti in generale ed in particolare di quelli della Calabria, e di Istoria e teoria de' tremuoti in generale ed in particolare di quelli della Calabria, e di Messina del MDCCLXXXIII.*
[4]It is worth noting that such a constructive type is characterized by a self weight less than an ordinary masonry wall, thanks to the consistent timber members presence, with consequently a reduced seismic mass.
[5] *…the timbers connection…*
[6] It was realized at the end of 18th C. relied on the Borbone constructive dictate.

the quoins, regular ashlars that by means of contact surface friction provide a certain solidarity between the two intersecting panels. Such a corner arrangement contemporaneously reduces the overturning tendency of the wall under perpendicular seismic action, thank to the restrain action acted by the orthogonal panel via the effective node.

Figure 3. Two types of angle bracket area arrangement: timber lacings simple superposed and regular ashlars.

The Baraccato buildings are characterized by an extensive adoption of a timber ring placed either inter-floor and at roof level. The intention is to distribute concentrated loads on the bearing wall and mainly, a crucial issue in the historical masonry building vulnerability, to prevent a possible wall overturning under out of plane actions. Also the floor beams aid to enhance the "box" behaviour of the structural system; in fact they are trenched in the timber ring with the aim to stiffen the beam-ring joint and realize an additional effective bond among the walls.

The Borbone system roof is commonly constituted by king post truss, alternatively by queen post truss. Both the lay out represent a "closed" system in which is ensured the absence of horizontal outward thrusts, particular harmful for the wall stability. Furthermore the trusses, by means of the chords, can counteract the overturning tendency of the walls during an earthquake. To this effect there is to add, as above emphasized for the joint beam – inter-floor ring, the notch realized on the tie beam that transforms the simple bearing of the chord-ring joint in a more rigid one. Moreover the covering structure benefits of the presence of saint Andrew crosses arranged orthogonal to the structural unit.

Figure 4. The longitudinal stability and stiffness of the roof is ensured by the presence of saint Andrew crosses.

That arrangement has the aim to prevent the trusses stacking under horizontal load and in general to ensure a roof longitudinal stiffness in addition to the, even if limited, stiffening action acted by the purlins and by the other members that support the *Casa Baraccata* covering.
Furthermore the Borbone technicians, with full awareness, recommended a regular development in plan and elevation with in some cases suggestions to pursue a bi-axial symmetry in the edifice. In fact the plan shape recommended in many treatises of the XVIIIth C. is the circle with the aim to *«... resistere alla forza dei terremoti...»*[7] (Gentili, 1742). That arrangement decreases torsional motions in case of earthquake thank to such a load bearing system that opposes identical distribution of the structural elements and stiffness according to the different directions.

Figure 5. The presence of a notch in the beam guarantees a more stiffness connection between the floor and the timber ring.

Relative to the energy dissipation under seismic event, obviously the timber frame concentrate its action almost exclusively in the joints. The latter in the Borbone system are characterized by half lap junctions with the presence of a pyramidal metallic nail, which, beside to ensure, even if in a limited way the transmission of bending and shear, could act to dissipate seismic energy by means of the two contemporary mechanisms of the compressed and crushed wood grain with the formation of a cavity and of the no recoverable iron deformation[8].

SEISMIC ASSESSMENT BY EXPERIMENTAL INVESTIGATIONS

Constructive properties of the sample and loading procedure

The experimental campaign, performed at CNR Ivalsa in September 2013, included two cyclic tests carried on timber frame with masonry infill and wooden frame empty.
It is worth emphasizing that, even if quasi static cyclic loading test is a simple and economical tool to approximately predict the seismic behaviour of the load bearing structure, relative to same parameters could be some differences if compared experimental data to the real response of an edifice under dynamic action (Gatto et al. 2003).
The samples tested in full scale represent the imperfect reproduction of a *Baraccato* wall existing in Mileto (Italy). In fact a detailed survey in situ and analyses on materials such as chemical investigations on mortar, petrographic thin sections on the rocks composing the masonry and the wood specie identification of the frame, provided information to imitate, in great detail, the geometrical and constructive real wall features.

[7] «*...to resist to the earthquake action...* ».
[8] During the seism the pyramidal shape of the nail could not ensure the deformation mechanisms above described due to a tendency to leave the wood hole under dynamic action.

The panel tested (masonry infill) was characterized by an height of 295 cm, a length of 339 cm and it was about 40 cm thick. The wooden posts (12 cm x 12 cm) constituting the frame were fastened to the horizontal members (7 cm x 7 cm) by means of half lap joints. The latter were stiffened by pyramidal nails with maximum cross section dimension of 10 mm. Those metallic devices were clenched in the back side of the skeleton, as in the original wall of Mileto.
The base of the framed wall was characterized by an high degree of fixity, achieved by means of inclined screws guaranteeing a stiff union with a glulam board and, indirectly, with the laboratory floor.

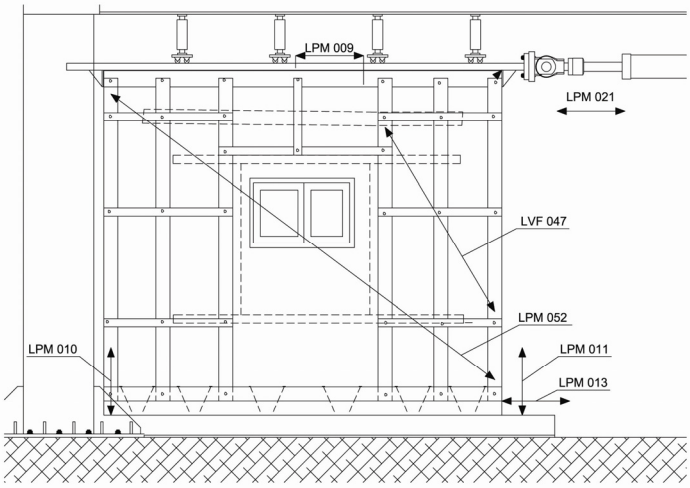

Figure 6. Specimen instrumentation.

A uniformly distributed load (18.7 KN/m) was applied to the panel to replace the self weight of the roof, constituted by wooden king post trusses, of the Mileto edifice.
The protocol loading was based on UNI 12512:2003 (*Timber structures – Test methods – Cycling testing of joints made with mechanical fasteners*) standard. That procedure included cyclic displacement sequences that increase, as a percentage of the yielding displacement value (10 cm), in amplitude during the tests up to the maximum displacement imposed of 80 mm.
The tests were conducted at a constant rate of 0,2 mm/s with lateral displacement applied at the top part of the post via an hydraulic actuator characterized by a 500 kN capacity.
To capture both the global behaviour and localized effects in the tested samples were placed LVDT (Linear Voltage Displacement Transducer), which in real time transferred data to a computer. The transducers LVF047(± 250 mm) and LPM052(± 100 mm) measured the diagonal deformation; the LVDT, LPM009 (± 20 mm) was placed at the mid point of the upper plate and measured the relative horizontal displacement between the steel beam of the test equipment and the top of the wall; two transducers LPM010(± 50 mm) and LPM011, (± 50 mm)were arranged near the base of the system to measure vertical displacements (uplift).The LPM013 (± 100 mm) took in account the horizontal slip of the timber frame base. The transducers LPM021(± 500 mm) quantified the horizontal displacement at the level of the actuator.

Test outcomes

The hysteretic behaviour was in general, both for the specimen with and without masonry infill, non linear, with significant values of energy dissipation and ductility.
The load-displacement graph exhibited a certain symmetry between the two directions, pushing (negative value) and pulling (positive value) of the actuator.
The test was stopped at 2.7% drift, corresponding to ±80 mm displacement for excessive deformation, in which the sample characterized by masonry infill achieved a Fmax, coincident with Fu, of -101.62 kN, relative to pushing direction; concerning in the positive quadrant the wall exhibited a ultimate

strength of about 100 kN and a maximum lateral load of 103 kN corresponding to 59 mm of slip (2% drift).

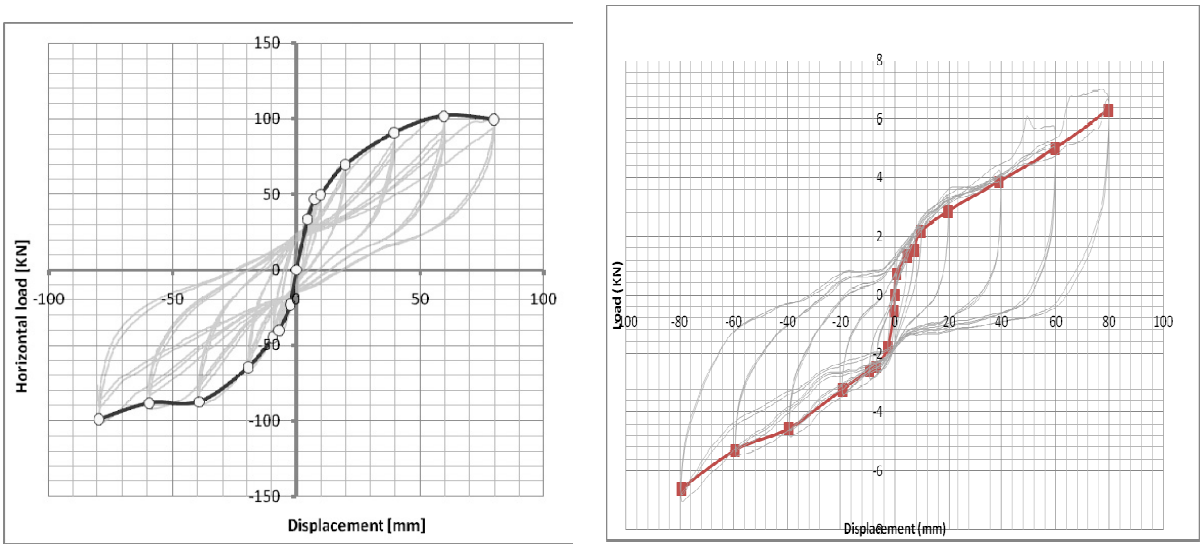

Figure 7. Load-displacement envelope curves relative to timber frame with masonry infill and empty frame specimen (LPM021).

From the envelope curve analysis a quite "elastic" behaviour was emphasized at the very beginning loading stage, when the low displacements allowed to the system a peculiar response: the high deformability of the timbers, under reversed cyclic loading, could bring back close to its original position the masonry, hence permanent deformations and damages to the specimen were slight, with only few cracks exhibited in the brittle mortar. An important slope characterized the first branch of the envelope curve namely an higher initial stiffness was showed relative to the first cycles.
The pseudo plastic phase started at about 10 mm of displacement (yielding displacement 10,5 mm, corresponding to Fy of 66,1 kN), remained practically constant until the maximum displacement, presenting a small decrease of the resistance after 60 mm displacement (positive direction).
A similar behaviour was recorded relative to the pushing direction.

Table 1. Timber frame with masonry infill cyclic test results.

		Fmax (KN) LPM021	D max (mm) LPM021	Fu (KN) LPM021	Du (mm) LPM021	Uplift (mm) LPM010	Uplift (mm) LPM011
Envelope curve 1st cycle	P	103.64	59.18	100.66	79.12	-20.64	
	N	-101.62	-79.02	-101.62	-79.02		-32.70
Envelope curve 2nd cycle	P	93.94	79.28	93.94	79.28	-30.18	
	N	-91.1	-79.16	-91.1	-79.16		-32.25
Envelope curve 3rd cycle	P	88.6	59.56	88.6	59.56	-20.94	
	N	-86.8	-79.66	-86.8	-79.66		-32.19

With the increment of slip amplitude, the wall experienced few expulsions and sliding of stones, the increase of cracks in the bed-joint of the masonry and in addition the wall behaved as three sub-panels (two lateral "columns" and a central "spandrel") characterized by a no synchrony motion, at least concerning high levels of displacement. However the strength impairment, that quantifies the load decreasing measured between the first and the third cycle of an identical displacement, exhibited values quite constant of about 14%, corresponding to an average decrease of resistance of 13 kN for both loading directions. All above described deformations and damages, in addition to a large amount of friction generated at the frame masonry interface, allowed to the system to dissipate a significant

value of energy and to achieve an high ductility. In fact the system exhibited values, relative to the dissipated energy, variable to 1579 kNmm corresponding to 80 mm in pulling and 323 kNmm related to -20 mm of displacement. The ductility value, measured as the ratio between the ultimate and the yielding displacement, was of 7.6 (positive direction). Even if the loops recorded a quite flat curve close to the origin and consequently a certain "pinching". The pinching phenomenon could be attributed to the detachment with a no recoverable gap, particularly experienced in the last steps of the test, of the masonry infill from the frame during the reversed cyclic load increasing.
It is worth observing that neither plastically deformations and ruptures occurred to the wooden frame, both relative to the joints and members, if we exclude the failure concentrated at the bottom of vertical post where the shear stress produced the splitting at the connection. That crack was caused by a no significant rocking mechanism of the wall with an uplift maximum of about 30 mm.
According to UNI 12512:2003 the hysteresis equivalent damping ratio (EVDR) was calculated as the ratio between the dissipated energy Ed and the in-put energy Ep, measured for the 3rd cycle of each ductility level, namely:

$$EVDR = \frac{E_d}{2\pi E_p} \tag{1}$$

Such a parameter was characterized by constant values between 6% and 7% for each displacement analyzed; even if a peak of 8.9% was recorded relatively to negative displacement of 20 mm.
The wooden skeleton empty, tested to assess the timber frame contribution to the seismic behaviour of the structural system did not show evident cracks in the members and in the joints.The sample concentrated its ductility in the connections, above all thank to friction phenomenon, no yielding deformations were recorded in the too rigid nails.

Figure 8. The uplift of the sample characterized by masonry infill and the deformation of the wooden frame empty relative to a 80 mm displacement.

The sample achieved similar value relative to pushing and pulling directions, in particular the ultimate load, coincident with Fmax, was equal to about 7 kN corresponding to a displacement either in the positive and negative quadrant of approximately 80 mm.
The load displacement graph exhibited fat loops due to the high deformation of the frame, immediately after the cycle characterized by a 7 mm of slip. The equivalent viscous damping ratio showed values variable between 23.47% (drift of 0.15%) and 8.16% relative to a 2.71% drift.
The strength impairment was characterized by a peak in the reduction of lateral resistance of 11.6% corresponding to a drift of 2.03% (60 mm of displacement). An improvement of strength, measured between the 1st and 3rd cycle for each displacement, was recorded, at 40 mm (+25%), 7 mm (+10.97%) and -10 mm (+6.9%) of slip.

The specimen, did not exhibit an evident rocking mechanism, with a maximum up-lift in the negative direction of 2,9 mm.
The tested model constituted by only wooden elements behaved with high deformation and scarce mechanical capacity even in correspondence of moderate lateral forces showing the importance of the infill frame under seismic excitation.

CONCLUSIONS

The Borbone constructive system syntetized the most advanced criteria and principles of the anti-seismic engineering of the Enlightnment Age.
The technicians of the Naples Reign had experienced multiple and high intensity telluric events and consequently, through studies and observations of damages occurred to the edifices, correctly interpreted the building behaviour during the seismic action. Despite the lack of "proper" calculations knowledge, the Borbone scientists, relying on a deep acquaintance of the materials and constructive systems of their time, could realize effective earthquake resistant construction. In fact many *Casa baraccata* buildings still stand after two centuries, facing many earthquakes, sometimes powerful (1905 and 1908), that struck the Calabria region.
That proper response under dynamic actions was, in a certain way, confirmed by the cyclic tests performed on real scale samples in the CNR Ivalsa laboratory in Trento. The masonry wall reinforced by timber frames pointed out non-linear behaviour with a significant ductility and amount of dissipated energy, an irrelevant impairment of the strength and constant values, relatively to various displacements, of the hysteresis equivalent damping ratio.

ACKNOWLEDGEMENTS

The authors are grateful to Regione Calabria for financial support relative to the cyclic tests.
Furthermore the authors would like to acknowledge Prof. Crisci, Dr. Miriello and Dr. Barca (Earth Science department of University of Calabria) for petrographic analyses and analyses on the mortar; Dr. Bonamini (CNR Ivalsa) for wooden specie analyses; Prof. Ceccotti for his valuable suggestions and contribution; Engineer Polastri (CNR Ivalsa) and Trees and Timber Institute technical staff for tests performed in San Michele (Tn).

REFERENCES

Barucci, C. (1990), *"La casa antisismica prototipi e brevetti"*, Gangemi Editore, Roma.

Ceccotti, A., Faccio, P., Nart, M., Sandhaas, C., Simeone, P. (2006), *"Seismic behaviour of historic timber-frame buildings in the Italian Dolomites"* - ICOMOS International Wood Committee - 15th International Symposium Istanbul and Rize (Turkey).

D'Ayala, D. (2011) "*The Role of Connections in the Seismic Resilience of Historic Masonry Structures*", in Proceedings ANIDIS,Bari Italy.

Gatto, K.; Chia-Ming Uang (2003) "*Effects of Loading protocol on the Cyclic Response of wood frame shear walls* ", Journal of Structural Engineering, 1384-1393.

Gentili, G. (1742) "*Relazione sul terremoto di Livorno del 1742*".

Poletti, E., Vasconcelos, G., (2012)"*Seismic behaviour of traditional half-timbered walls: cyclic tests and strengthening solutions"* - Structural Analysis of Historical Constructions – Jerzy Jasieńko (ed), Wrocław Poland.

Ruggieri, N. (2005) "*La casa antisismica*", in Proceedings of the International Conference of Historic Wooden Structures, Tampone ed., Florence Italy, 141-146.

Ruggieri, N.(2013) "*Il sistema antisismico borbonico, muratura con intelaiatura lignea, genesi e sviluppo in Calabria alla fine del '700*", Bollettino degli Ingegneri, 10.

Ruggieri, N.; Tampone, G.; Zinno, R. (2013) "*Typical Failures, Seismic Behaviour and Safety of the "Bourbon system with Timber Framing*", Advanced Material Research, vol. 778: Trans Tech Publication: Switzerland, 58-65.

Ruggieri, N.; Zinno, R. (2013) "*Behaviour of the Borbone Constructive System under Cyclic Loading. Preliminary Report* ", in Proceedings of the International Conference of Historic Timber Frames in the Mediterranean Area, Ruggieri, Tampone, Zinno Ed., Cosenza Italy, in press.

Ruggieri, N.; Zinno, R. (2013) "*Mechanical and Constructive Interpretation of the Giovanni Vivenzio's model*", in Proceedings of the International Conference of Historic Timber Frames in the Mediterranean Area, Ruggieri, Tampone, Zinno Ed., Cosenza Italy, in press.

Ruggieri, N., Zinno, R. (2014) "*Analisi storica euristica del sistema antisismico Borbonico"*, in proceedings of 1st International Conference on the History of Engineering, D'Agostino, Fabricatore, Ed., Naples, Cuzzolin, 410-424.

Ruggieri, N. (2014) "*In-plane Cyclic Tests on Historic Timber Framed Wall. Outcomes Comparison*", in proceedings of COST action FP1004 Experimental Research with Timber, ed. Schober, Prague: 56-61.

Tobriner, S. (1983) "*La Casa Baraccata: Earthquake-Resistant Construction in 18th Century Calabria*", Journal of the Society of Architectural Historians , Vol. 42: University of California Press, 131-138.

Vivenzio, G. (1783) "*Istoria e teoria de' tremuoti in generale ed in particolare di quelli della Calabria, e di Istoria e teoria de' tremuoti in generale ed in particolare di quelli della Calabria, e di Messina del MDCCLXXXIII*", Stamperia Regale, Napoli.